Magic Chef™
SO RIGHT AT HOME.™

0.9 cu. ft. Microwave Oven

MCD990ARB / MCD990ARW

Instruction Manual and Cooking Guide

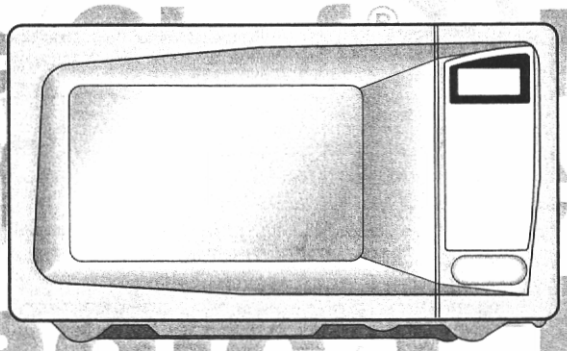

So Right at Home.

Never operate the oven when it is empty or without the glass turntable.
Before operating this oven, please read these instructions completely.

PRECAUTIONS TO AVOID POSSIBLE EXPOSURE TO EXCESSIVE MICROWAVE ENERGY

(a) **Do not attempt to operate this oven with the door open** since open-door operation can result in harmful exposure to microwave energy. It is important not to defeat or tamper with the safety interlocks.

(b) **Do not place any object** between the oven front face and the door or allow soil or cleaner residue to accumulate on sealing surfaces.

(c) **Do not operate the oven if it is damaged.** It is particularly important that the oven door close properly and that there is no damage to the: (1) door (bent), (2) hinges and latches (broken or loosened), (3) door seals and sealing surfaces.

(d) The oven should not be adjusted or repaired by anyone except properly qualified service personnel.

TABLE OF CONTENTS

- PRECAUTIONS TO AVOID POSSIBLE EXPOSURE TO EXCESSIVE MICROWAVE ENERGY 1
- IMPORTANT SAFETY INSTRUCTIONS 2
- FEDERAL COMMUNICATIONS COMMISSION RADIO FREQUENCY INTERFERENCE STATEMENT 3
- GROUNDING INSTRUCTIONS 3
- INSTALLATION 4
- SPECIFICATIONS 5
- TRIM KIT INSTALLATION GUIDE 6
- FEATURES DIAGRAM 8
- OPERATION PROCEDURE 10
- CONTROLS 11
  - SETTING THE CLOCK 11
  - TIME DEFROSTING 11
  - WEIGHT DEFROSTING 12
  - COOKING IN ONE STAGE 13
  - COOKING IN TWO STAGES 13
  - KITCHEN TIMER MODE 14
  - SPEEDY COOK 15
  - ONE TOUCH COOKING 15
  - AUTO COOK 16
  - LESS, MORE 17
  - CHILD SAFETY LOCK 17
  - TO STOP THE OVEN WHILE THE OVEN IS OPERATING 17
- CARE OF YOUR MICROWAVE OVEN 18
- BEFORE YOU CALL FOR SERVICE 19
- CARE AND CLEANING 19
- QUESTIONS AND ANSWERS 20
- COOKING INSTRUCTIONS 21
- USE YOUR MICROWAVE OVEN SAFELY 22
- ARCING 22
- MICROWAVING PRINCIPLES 23
- HOW MICROWAVES COOK FOOD 23
- CONVERSION CHARTS 23
- COOKING TECHNIQUES 24
- DEFROSTING GUIDE 25
- COOKING & REHEATING CHART 26
- VEGETABLE CHART 28
- RECIPES 29

IMPORTANT SAFETY INSTRUCTIONS

When using electrical appliances, basic safety precautions should be followed, including the following:

WARNING-To reduce the risk of burns, electric shock, fire, injury to persons or exposure to excessive microwave energy:

1. Read all instructions before using the appliance.
2. Read and follow the specific "PRECAUTIONS TO AVOID POSSIBLE EXPOSURE TO EXCESSIVE MICROWAVE ENERGY" found on page 1.
3. This appliance must be grounded. Connect only to properly grounded outlet. See "GROUNDING INSTRUCTIONS" found on page 3.
4. Install or locate this appliance only in accordance with the provided installation instructions.
5. Some products such as whole eggs and sealed containers - for example, closed glass jars are able to explode and should not be heated in this oven.
6. Use this appliance only for its intended use as described in this manual. Do not use corrosive chemicals or vapors in this appliance. This type of oven is specifically designed to heat, cook, or dry food. It is not designed for industrial or laboratory use.
7. As with any appliance, close supervision is necessary when used by children.
8. Do not operate this appliance if it has a damaged cord or plug, if it is not working properly, or if it has been damaged or dropped.
9. This appliance should be serviced only by qualified service personnel.
   Contact nearest authorized service facility for examination, repair or adjustment.
10. Do not cover or block any openings on the appliance.
11. Do not store this appliance outdoors. Do not use this product near water — for example, near a kitchen sink, in a wet basement, near a swimming pool, or similar locations.
12. Do not immerse cord or plug in water.
13. Keep cord away from heated surfaces.
14. Do not let cord hang over edge of table or counter.
15. When cleaning surfaces of door and oven that comes together on closing the door, use only mild, non-abrasive soaps or detergents applied with a sponge or soft cloth.
16. To reduce the risk of fire in the oven cavity:
    a) Do not overcook food. Carefully attend appliance when paper, plastic, or other combustible materials are placed inside the oven to facilitate cooking.
    b) Remove wire twist-ties from paper or plastic bags before placing bag in oven.
    c) If materials inside the oven ignite, keep oven door closed, turn oven off, and disconnect the power cord, or shut off power at the fuse or circuit breaker panel.
    d) Do not use the cavity for storage purposes. Do not leave paper products, cooking utensils, or food in the cavity when not in use.
17. Liquids, such as water, coffee, or tea are able to be overheated beyond the boiling point without appearing to be boiling due to surface tension of the liquid. Visible bubbling or boiling when the container is removed from the microwave oven is not always present. THIS COULD RESULT IN VERY HOT LIQUIDS SUDDENLY BOILING OVER WHEN A SPOON OR OTHER UTENSIL IS INSERTED INTO THE LIQUID.

    To reduce the risk of injury to persons:
    a) Do not overheat the liquid.
    b) Stir the liquid both before and halfway through heating it.
    c) Do not use straight-sided containers with narrow necks.
    d) After heating, allow the container to stand in the microwave oven for a short time before removing the container.
    e) Use extreme care when inserting a spoon or other utensil into the container.
18. Do not use this microwave oven to heat corrosive chemicals (for example, sulfides and chlorides). Vapors from such corrosive chemicals may interact with the contact and springs of the safety interlock switches thereby rendering them inoperable.
19. Keep the waveguide cover clean at all times.
    Wipe the oven interior with a soft damp cloth after each use. If you leave grease or fat anywhere in the cavity it may overheat, smoke or even catch fire when next using the oven.
20. Never heat oil or fat for deep frying as you cannot control the temperature and doing so may lead to overheating and fire.
21. Do not operate the oven without the glass tray in place. Be sure it is properly sitting on the rotating base.

Comme pour tous appareils ménagers, son utilisation par des enfants doit être surveillée de près.

Au cas où les matières placées dans le four s'enflammeraient, ne pas ouvrir la porte, éteindre le four et débrancher le fil électrique ou couper l'alimentation au tableau électrique (fusibles ou disjoncteurs).

SAVE THESE INSTRUCTIONS

FEDERAL COMMUNICATIONS COMMISSION RADIO FREQUENCY INTERFERENCE STATEMENT

WARNING:
This equipment generates and uses ISM frequency energy and if not installed and used properly, that is in strict accordance with the manufacturer's instructions, may cause interference to radio and television reception.
It has been type-tested and found to comply with limits for an ISM Equipment pursuant to part 18 of FCC Rules, which are designed to provide reasonable protection against such interference in a residential installation.
However, there is no guarantee that interference will not occur in a particular installation.
If this equipment does cause interference to radio or television reception, which can be determined by turning the equipment off and on, the user is encouraged to try to correct the interference by one or more of the followings.

- Reorient the receiving antenna of radio or television.
- Relocate the Microwave oven with respect to the receiver.
- Move the microwave oven away from the receiver.
- Plug the microwave oven into a different outlet so that microwave oven and receiver are on different branch circuits.

THE MANUFACTURER is not responsible for any radio or TV interference caused by UNAUTHORIZED MODIFICATION to this microwave oven. It is the responsibility of the user to correct such interference.

GROUNDING INSTRUCTIONS

This appliance must be grounded. In the event of an electrical short circuit, the grounding plug reduces the risk of electric shock by providing an escape wire for electric current. This appliance is equipped with a cord having a grounding wire with a grounding plug. The plug must be plugged into an outlet that is properly installed and grounded.

WARNING: Improper use of the grounding can result in a risk of electric shock.
Consult a qualified electrician or serviceman if the grounding instructions are not completely understood, or if doubt exists as to whether the appliance is properly grounded, and either :

(1) If it is necessary to use an extension cord, use only a 3-wire extension cord that has a 3-blade grounding plug, and a 3-slot receptacle that will accept the plug on the appliance. The marked rating of the extension cord shall be equal to or greater than the electrical rating of the appliance. or
(2) Do not use an extension cord, if the power supply cord is too short, have a qualified electrician or serviceman install an outlet near the appliance.

WARNING: Do not cut or remove the third(ground) prong from the power cord under any circumstances.

INSTALLATION

1. **Examine the oven after unpacking.**
   Check for damage such as a misaligned door, broken door or dent in the cavity.
   If any damage is visible, DO NOT INSTALL, and notify your dealer immediately.

2. **Level, flat location.**
   Install the microwave oven on a level, flat surface.

3. **Ventilation.**
   Do not block air vents. If they are blocked during operation, the oven may overheat and eventually cause a failure.
   For proper ventilation, allow 3 inches of space between oven top, sides, rear and adjacent surfaces.

4. **Away from radio and TV sets.**
   Poor television reception and radio interference may result if the oven is located close to a TV, radio, antenna, feeder, etc.
   Place the oven as far from them as possible.

5. **Away from heating appliances and water taps.**
   Keep the oven away from heat, steam or splashing liquids. These things can adversely affect oven wiring and contacts.

6. **Power supply.**
   This microwave oven requires a power supply of approximately 15 Amperes, 120 Volts, 60Hz and a grounded outlet. A short power cord is provided to reduce the risk of the user becoming entangled in or tripping over a longer cord. Longer cord sets or extension cords are available and may be used if care is exercised in their use
   If an extension cord is used, the marked electrical rating of the cord should be at least as great as the electrical rating of the oven.
   The extension cord must be a grounding-type 3-wire cord. The longer cord should be arranged so that it will not drape over the counter top or tabletop where it can be pulled on by children or tripped over unintentionally

7. The minimum height of free space necessary above the top surface of the oven is 100mm.

When use 3-pronged plug

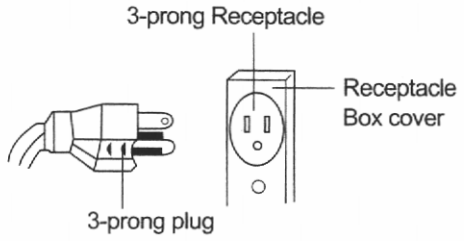

When use grounding adaptor, make sure the receptacle box is fully grounded.

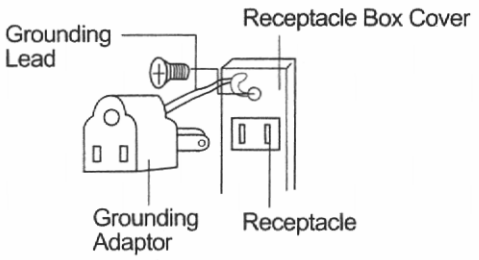

"THE CANADIAN ELECTRICAL CODE DOES NOT ALLOW THE USE OF THE GROUNDING ADAPTOR"

SPECIFICATIONS

POWER SUPPLY		120V AC 60 Hz SINGLE PHASE WITH GROUNDING
MICROWAVE	POWER CONSUMPTION	1350 W
	OUTPUT POWER	900 W
	FREQUENCY	2450 MHz
OUTSIDE DIMENSIONS (W X H X D)		495 X 294 X 388 mm (19.5 X 11.6 X 15.3 in.)
CAVITY DIMENSIONS (W X H X D)		320 X 228 X 338 mm (12.6 x 9.0 x 13.3 in)
CAVITY VOLUME		0.9 cu.ft.
NET WEIGHT		APPROX. 13KG (28.7 lbs.)
TIMER		59 min. 99 sec.
POWER LEVELS		10 LEVELS

** Specifications are subject to change without notice.*

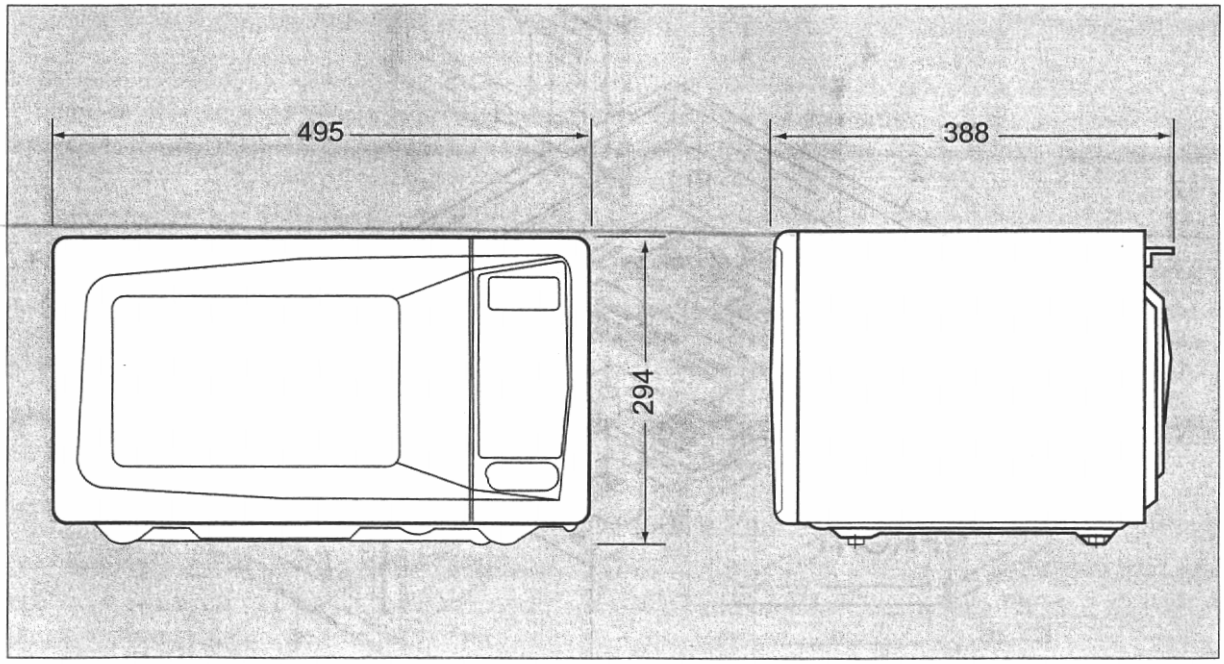

TRIM KIT INSTALLATION GUIDE

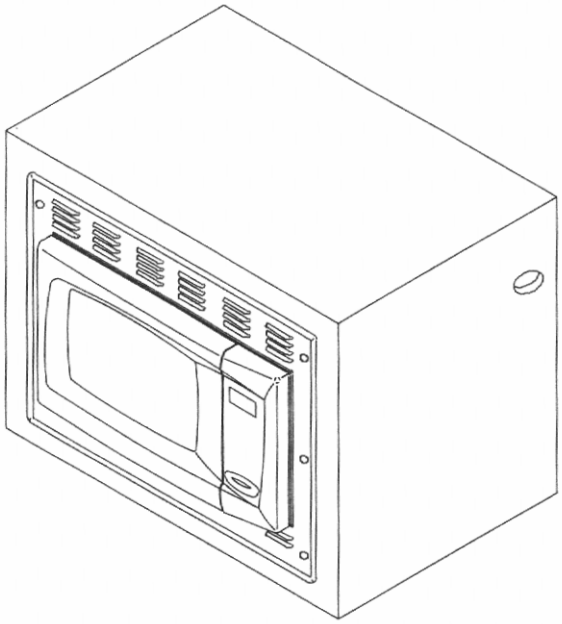

1. Turn a set upside down.
   Adhere three urethane foams(1,2) and tighten four screws(4) through the holes of four feet(3) to base plate.

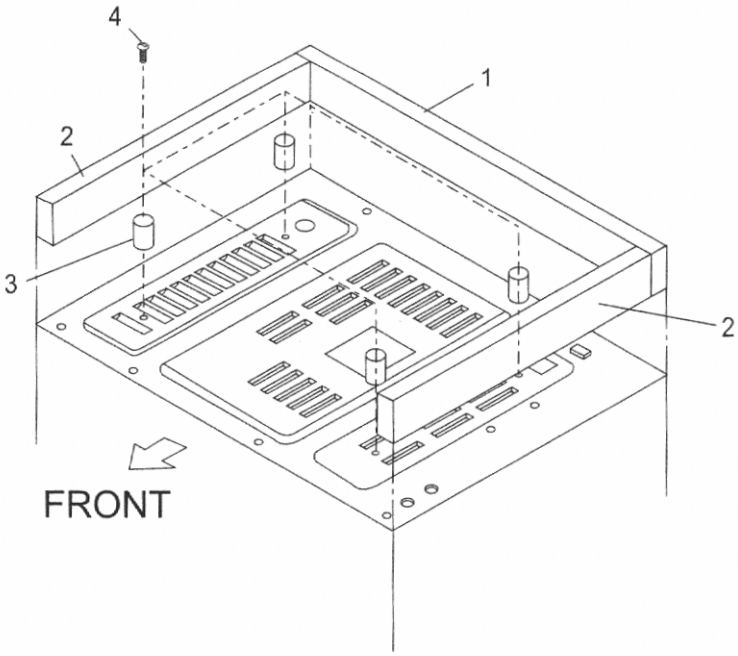

IMPORTANT:
- Adherence a long urethane form (1) to the back side of Base Plate.
- Adherence two short urethane form (2) to the side of Base Plate, make sure that two short forms adhere near with out a gab with a long from (1)

2. Remove three screws(1) on cabinet back.

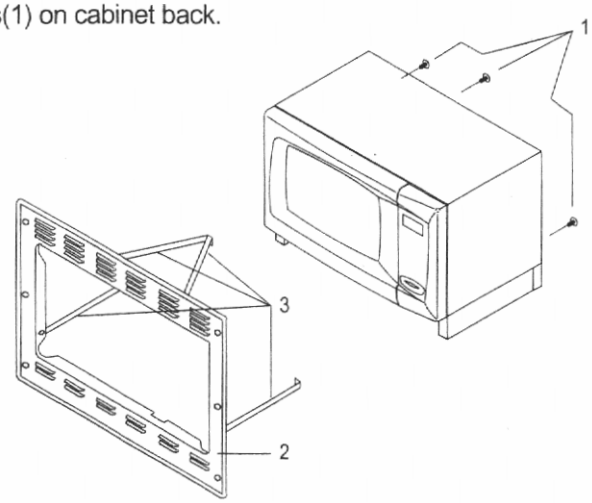

3. Install the trim kit(2) and mounting brackets(3).
4. Tighten three screws(1) through the holes of mounting brackets(3)

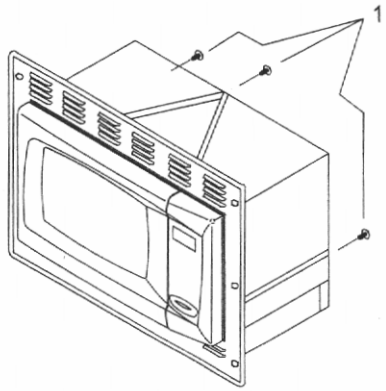

5. For proper operation, install oven in the wooden box* as shown. Fix the trim kit with six screws.

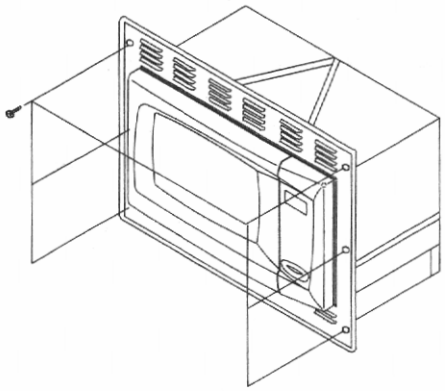

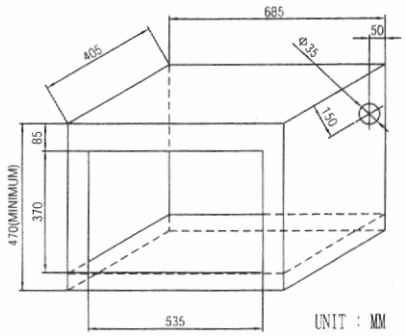

(Wooden Box)

IMPORTANT: Dimensions are based on plywood thickness of 11 mm. Use of a different plywood thickness requires the box dimensions to be adjusted accordingly to maintain the required clearances on the sides and top for proper operation of the unit.

FEATURES DIAGRAM

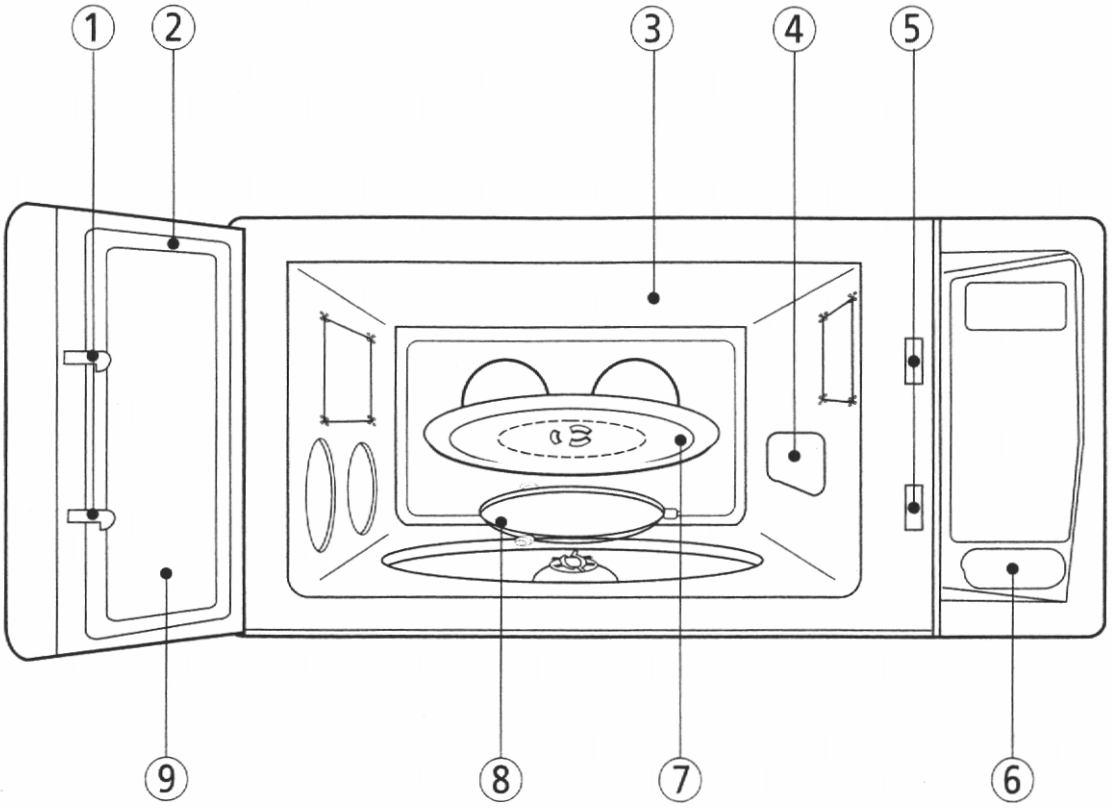

1. **Door latch-**When the door is closed it will automatically shut off. If the door is opened while the oven is operating, the magnetron will automatically shut off.

2. **Door seal-**The door seal maintains the microwave within the oven cavity and prevents microwave leakage.

3. **Oven cavity**

4. **Spatter shield-**Protects the microwave outlet from splashes of cooking foods.

5. **Safety interlock system-**Prevents the oven from operating while the door is opened.

6. **Door release button-**Pushing this button stops oven operation and opens the door.

7. **Glass cooking tray-**Made of special heat resistant glass. The tray must always be in proper position before operating. Do not cook food directly on the tray.

8. **Roller guide-**Supports the glass cooking tray.

9. **Door screen-**Allows viewing of food. The screen is designed so that light can pass through, but not the microwaves.

FEATURES DIAGRAM (continued)

MCD990ARB

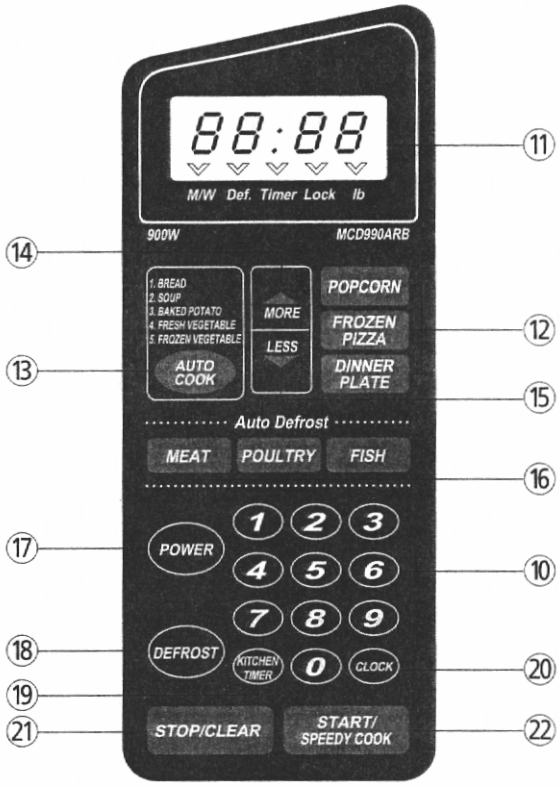

MCD990ARW

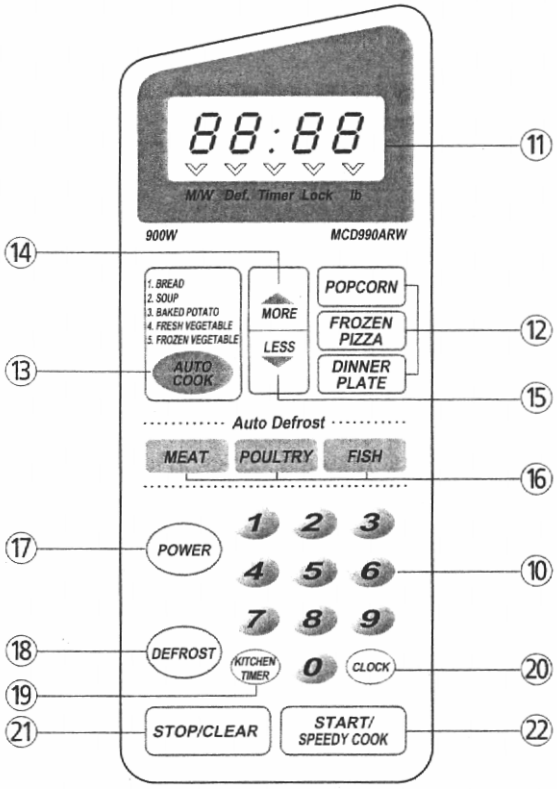

10. **Time set pad-**Used to set the cooking time and the present time.

11. **Display-**Cooking time, power level, indicators and present time are displayed.

12. **One touch-**Used to cook or reheat specific quantities of food.

13. **Auto Cook-**Used to cook or reheat.

14. **More-**Used to add time to cooking.

15. **Less-**Used to remove time from cooking.

17. **Power-**Used to set power level.

18. **Defrost-**Used to defrost foods.(for time)

19. **Kitchen Timer-**Used as a minute timer, to delay the start of cooking, or to set a holding time after cooking.

20. **Clock-**Used to set clock.

21. **Stop/Clear-**Used to stop the oven operation or to delete the cooking data.

22. **Start/Speedy cook-**Used to start the oven

OPERATION PROCEDURE

This section includes useful information about oven operation.

1. Plug power supply cord into a standard 3-pronged 15 Amp, 120V AC 60Hz power outlet.
2. After placing the food in a suitable container, open the oven door and put it on the glass tray. The glass tray and roller guide must always be in place during cooking.
3. Shut the door. Make sure that it is firmly closed.

1 The oven light is on only when the microwave oven is operating.

2 The oven door can be opened at any time during operation by pushing the door release button on the control panel. The oven will automatically shut off.

3 Each time a pad is touched, a BEEP will sound to acknowledge the touch.

4 The oven automatically cooks on full power unless set to a lower power level.

5 The display will show " : 0" when the oven is plugged in.

6 Time clock returns to the present time when the cooking time ends.

7 When the STOP/CLEAR pad is touched during the oven operation, the oven stops cooking and all information retained. To erase all information(except the present time), touch the STOP/CLEAR pad once more. If the oven door is opened during the oven operation, all information is retained.

8 If the START pad is touched and the oven does not operate, check the area between the door and door seal for obstructions and make sure the door is closed securely. The oven will not start cooking until the door is completely closed or the program has been reset.

Make sure the oven is properly installed and plugged into the electrical outlet.

WATTAGE OUTPUT CHART

- The power-level is set by touching the POWER pad. The chart shows the display, the power level and the percentage of power.

Touch POWER pad	Power level (Display)	Approximate Percentage of Power
once	P-HI	100%
twice	P-90	90%
3 times	P-80	80%
4 times	P-70	70%
5 times	P-60	60%
6 times	P-50	50%
7 times	P-40	40%
8 times	P-30	30%
9 times	P-20	20%
10 times	P-10	10%
11 times	P-00	0%

CONTROLS

SETTING THE CLOCK

When the oven is first plugged in, the display will flash ":0" and a tone will sound. If the AC power ever goes off, the display shows " : 0" when the power comes back on.

CLOCK

1. Touch CLOCK pad.
   This is a 12 hour clock system.

2. Touch CLOCK pad once more.
   This is a 24 hour clock system.

NOTE : This oven has multiple clock systems. If you want 12 hour clock system, omit this step.

3. Enter the correct time of day by touching the time set pads in sequence.

4. Touch CLOCK pad.

The display stops blinking, and the clock starts blinking. If you selected 12 hour clock system, this digital clock allows you to set from 1:00 to 12:59. If you selected 24 hour clock system, this digital clock allows you to set from 0:00 to 23:59.

NOTE: If you attempt to enter an incorrect time, the time will not be set and a error signal tone will sound. Touch the CLOCK pad and re-enter the time.

TIME DEFROSTING

When DEFROST is selected, the automatic cycle divides the defrosting time into periods of alternating defrost and stand times by cycling on and off.

DEFROST

1. Touch DEFROST pad.

The DEF indicator lights and " : 0" is displayed.

2. Touch the time set pads for the desired defrosting time.

The display will show what you touched.

Note : Your oven can be programmed for 59 minutes 99 seconds. (59 : 99)

3. Touch START pad.

When you touch START pad, the DEF indicator starts blinking to show the oven is in the DEFROST mode. The display counts down the time to show you how much defrosting time is left in the DEFROST mode. The oven beeps during the defrosting cycle to signal that the food needs to be turned or rearranged. When the defrosting time ends, you will hear 3 beeps.

WEIGHT DEFROSTING

AUTO DEFROST lets you easily defrost food by eliminating guesswork in determining defrosting time. Follow the steps below for easy defrosting.

MEAT	1. Touch MEAT pad.	The lb indicator lights and " 1.0 " is displayed.
	2. Select the desired defrosting weight. (Refer to the weight defrost chart below.)	The display will show what you touched.
	3. Touch START pad.	MEAT DEFROSTING begins.
POULTRY	1. Touch POULTRY pad.	The lb indicator lights and " 1.5 " is displayed.
	2. Select the desired defrosting weight. (Refer to the weight defrost chart below.)	The display will show what you touched.
	3. Touch START pad.	POULTRY DEFROSTING begins.
FISH	1. Touch FISH pad.	The lb indicator lights and " 0.5 " is displayed.
	2. Select the desired defrosting weight. (Refer to the weight defrost chart below.)	The display will show what you touched.
	3. Touch START pad.	FISH DEFROSTING begins.

* WEIGHT DEFROST CHART

Touch pad	MEAT	POULTRY	FISH
once	1.0 lb	1.5 lb	0.5 lb
twice	1.5 lb	2.0 lb	1.0 lb
3 times	2.0 lb	2.5 lb	1.5 lb
4 times	2.5 lb	3.0 lb	2.0 lb

The defrosting time is automatically determined by the weight selected.
When you touch START pad, the lb indicator goes off and the DEF indicator blinks and the defrosting time counts down in the display window. The oven beeps during the defrosting cycle to signal that the food needs to be turned or rearranged. When the defrosting time ends, you will hear 3 beeps.

COOKING IN ONE STAGE

POWER	1. Touch POWER pad. (Select the desired power level.)	The M/W indicator lights "P-HI" is displayed. The display will show what you touched.
		Note : If steps 1 and 2 are omitted, the oven will cook at full power.
	2. Touch the time set pads for the cooking time.	The display will show what you touched.
		Note : Your oven can be programmed for 59 minutes 99 seconds. (59 : 99)
	3. Touch START pad.	

When you touch START pad, the M/W indicator starts blinking to show the oven is cooking.
The display counts down the time to show how much cooking time is left. When the cooking time ends, you will hear 3 beeps.

NOTE: Using lower power levels increases the cooking time which is recommended for foods such as cheese, milk and slow cooking of meats.

COOKING IN TWO STAGES

All recipes require the frozen foods to be defrosted fully before cooking.
This oven can be programmed to automatically defrost foods before cooking.

DEFROST	1. Touch DEFROST pad.	The DEF indicator lights and " : 0" is displayed.
	2. Touch the time set pads for the defrosting time you want.	The display will show what you touched.
POWER	3.Touch POWER pad. (Select the desired power level.)	The M/W indicator lights and "P-HI" is displayed. The display will show what you touched.
	4. Touch the time set pads for the desired cooking time.	The display will show what you touched.
	5. Touch START pad.	

When you touch START pad, the DEF and M/W indicators come on to confirm the power levels selected. The DEF indicator starts blinking to show you that the oven is in DEFROST mode.
The display counts down the time remaining in DEFROST mode. When the oven beeps, turn over,break apart and/or redistribute the food. At the end of DEFROST mode, the oven will beep and start M/W cook.
The DEF indicator goes off and the M/W indicator starts blinking. The display counts down the time remaining in M/W mode. When M/W cook ends, you will hear 3 beeps.

KITCHEN TIMER MODE

Timer operates as a minute timer, can be set to delay cooking and used to set a holding time after cooking. However delay cooking can not be programmed for defrost. Timer operates without microwave energy.

HOW TO USE AS A MINUTE TIMER

KITCHEN TIMER

1. Touch KITCHEN TIMER pad.	The TIMER indicator lights and " : 0" is displayed.
2. Enter the amount of time you want to count down.	The display will show what you touched.
3. Touch START pad.	

The TIMER indicator starts blinking and the display counts down the time remaining in KITCHEN TIMER mode. When KITCHEN TIMER mode ends, you will hear 3 beeps.

HOW TO USE TO DELAY THE START OF COOKING

KITCHEN TIMER

1. Touch KITCHEN TIMER pad.	The TIMER indicator lights and " : 0" is displayed.
2. Enter the amount of time you want to delay.	The display will show what you touched.
3. Program the desired power level and cooking time for food to be cooked.	The M/W indicator lights and the selected power level & cooking time are displayed.
4. Touch START pad.	

When you touch START pad, the TIMER indicator starts blinking and the display counts down the time remaining in KITCHEN TIMER mode. When KITCHEN TIMER mode ends, the oven will beep. The TIMER indicator goes off and M/W indicator starts blinking. The display counts down the time remaining in M/W mode. When M/W cook ends, you will hear 3 beeps.

HOW TO USE TO SET A HOLDING TIME

KITCHEN TIMER

1. Program the desired cooking time.	The M/W indicator lights and the selected time is displayed.
2. Touch KITCHEN TIMER pad.	The TIMER indicator lights and " : 0" is displayed.
3. Enter the amount of time you want the oven to hold.	The display will show what you touched.
4. Touch START pad.	

The M/W indicator starts blinking and the display counts down the time remaining in M/W mode. When the M/W cook ends, the oven will beep. The M/W indicator goes off and TIMER indicator starts blinking. The display counts down the time remaining in KITCHEN TIMER mode. When the KITCHEN TIMER mode ends, you will hear 3 beeps.

Note : Your oven can be programmed for 59 minutes 99 seconds. (59 : 99)

SPEEDY COOK

SPEEDY COOK allows you to reheat for 30 seconds at full power by simply touching the SPEEDY COOK pad.
By repeatedly touching the SPEEDY COOK pad, you can also extend reheating time to 5 minutes by 30 second increments.

START/ SPEEDY COOK	1. Touch SPEEDY COOK pad.	When you touch SPEEDY COOK pad, ":30" is displayed. After 1.5 seconds, the oven starts reheating.

ONE TOUCH COOKING

One touch cook allows you to cook or reheat many of your favorite foods by touching just one pad.
To increase quantity, touch the chosen pad until number in display is same as the desired quantity to cook. (except for POPCORN)

POPCORN	1. Touch POPCORN pad once for 3.5 oz bag.	When you touch POPCORN pad once, " 3.5" is displayed. After 1.5 seconds, the display is changed into cooking time and the oven starts cooking.

NOTE: 1. Use prepackaged room-temperature microwave popcorn.
2. Place bag in oven according to manufacturer's directions.
3. Pop only one bag at a time.
4. After popping, open bag carefully: popcorn and steam are extremely hot.
5. Do not reheat unpopped kernels or reuse bag.
6. Do not leave oven unattended while popping popcorn.

CAUTION: If prepackaged popcorn is of a different weight than the recommended weight, do not use the popcorn pad. Follow the manufacturer instruction.

FROZEN PIZZA	1. Touch FROZEN PIZZA pad once for 7 oz pizza or twice for 14 oz pizza.	When you touch FROZEN PIZZA pad once, " 7 " is displayed. After 1.5 seconds, the display is changed into the cooking time and the oven starts cooking.

*** FROZEN PIZZA ***
- 7 oz : Touch FROZEN PIZZA pad once.
- 14 oz : Touch FROZEN PIZZA pad twice within 1.5 seconds.

NOTE: 1. Use only one frozen pizza at a time
2. Use only frozen pizza made for microwave ovens.
3. If the cheese of frozen pizza does not melt sufficiently, cook a few seconds longer.
4. Some brands of frozen pizza may require more or less cooking time.

ONE TOUCH COOKING (continued)

DINNER PLATE

1. Touch DINNER PLATE pad once for 12 oz of dinner plate or twice for 15 oz of dinner plate.

When you touch DINNER PLATE pad once, " 12 " is displayed.
After 1.5 seconds, the display is changed into cooking time and the oven starts cooking.

*** DINNER PLATE ***
- 12 oz : Touch DINNER PLATE pad once.
- 15 oz : Touch DINNER PLATE pad twice within 1.5 seconds.

AUTO COOK

AUTO COOK allows you to cook or reheat many of your favorite foods by repeatedly touching auto cook pad.

AUTO COOK

1. Touch AUTO COOK pad.

When you touch AUTO COOK pad once, " AC-1 " is displayed. By repeatedly touching this pad, you can select other food category as shown in the chart below.

CATEGORY	FOOD	WEIGHT	TOUCH PAD
AC-1	BREAD	4 slices(1.5-2 oz. each)	Touch AUTO COOK once.
AC-2	SOUP	12 oz.	Touch AUTO COOK twice
AC-3	BAKED POTATO	3 potatoes(7-8 oz. each)	Touch AUTO COOK three times
AC-4	FRESH VEGETABLE	7 oz.	Touch AUTO COOK four times
AC-5	FROZEN VEGETABLE	7 oz. package	Touch AUTO COOK five times.

2. Touch START pad.

When you touch START pad, the display is changed into cooking time and the oven starts cooking.

LESS, MORE

To alter one touch cooking or cooking time while oven is in operation, use LESS or MORE.(except for defrosting)
Touch LESS/MORE pad to decrease/increase the one touch cooking time in multiples of 10 seconds.
The overall one touch cooking time can be increased to a maximum of 59 minutes 50 seconds.
Touch LESS/MORE pad to decrease/increase the cooking time in multiples of 1 minute.
The overall cooking time can be increased to a maximum of 59 minutes.

CHILD SAFETY LOCK

The safety lock prevents unwanted oven operation such as by small children.
To set, press and hold STOP/CLEAR for 3 seconds, a beep sounds and LOCK indicator lights.
To cancel, press and hold STOP/CLEAR for 3 seconds, a beep sounds and LOCK indicator goes off.

TO STOP THE OVEN WHILE THE OVEN IS OPERATING

1. Touch STOP/CLEAR pad.
   - You can restart the oven by touching START pad.
   - Touch STOP/CLEAR once more to erase all instructions.
   - You must enter in new instructions.
2. Open the door.
   - You can restart the oven by closing the door and touching START pad.

NOTE: Oven stops operating when door is opened.

CARE OF YOUR MICROWAVE OVEN

1 Turn the oven off before cleaning.

2 Keep the inside of the oven clean. When food spatters or spilled liquids adhere to oven walls, wipe with a damp cloth. Mild detergent may be used if the oven gets very dirty. The use of harsh detergent or abrasives is not recommended.

3 The outside oven surface should be cleaned with soap and water, rinsed and dried with a soft cloth. To prevent damage to the operating parts inside the oven, water should not be allowed to seep into the ventilation openings.

4 If the Control Panel becomes wet, clean with a soft, dry cloth. Do not use harsh detergents or abrasives on Control Panel.

5 If steam accumulates inside or around the outside of the oven door, wipe with a soft cloth. This may occur when the microwave oven is operated under high humidity conditions and in no way indicates malfunction of the unit.

6 It is occasionally necessary to remove the glass tray for cleaning. Wash the tray in warm sudsy water or in a dishwasher.

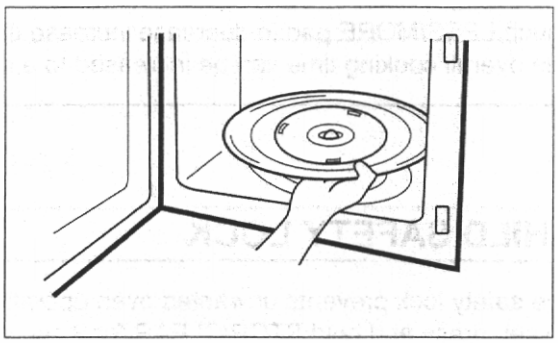

7 The roller guide and oven cavity floor should be cleaned regularly to avoid excessive noise. Simply wipe the bottom surface of the oven with mild detergent water or window cleaner and dry. The roller guide may be washed in mild sudsy water.

ROLLER GUIDE

1 The ROLLER GUIDE and oven floor should be cleaned frequently to prevent excessive noise.

2 The ROLLER GUIDE MUST ALWAYS be used for cooking together with the Glass Tray.

GLASS TRAY

1 DO NOT operate the oven without the Glass Tray in place.

2 DO NOT use any other Glass Tray with this oven.

3 If Glass Tray is hot, ALLOW TO COOL before cleaning or placing it in water.

4 DO NOT cook directly on the Glass Tray. (Except for popcorm)

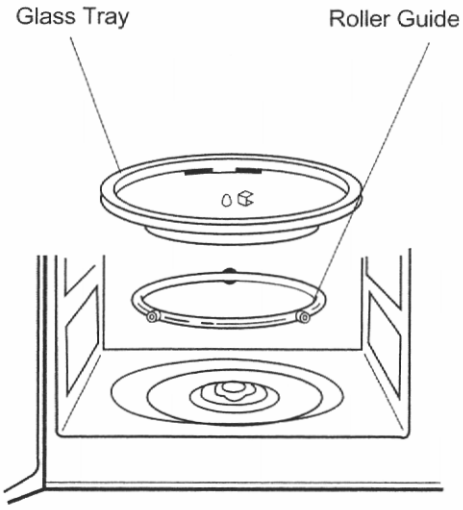

BEFORE YOU CALL FOR SERVICE

• The oven doesn't work :

1. Check that the power cord is securely plugged in.
2. Check that the door is firmly closed.
3. Check that the cooking time is set.
4. Check for a blown circuit fuse or tripped main circuit breaker in your house.

• Sparking in the cavity :

1. Check utensils. Metal containers or dishes with metal trim should not be used.
2. Check that metal skewers or foil does not touch the interior walls.

If there is still a problem, contact the service station.
A list of these stations is included in the oven.

CARE AND CLEANING

Although your oven is provided with safety features, it is important to observe the following:

1. It is important not to defeat or tamper with safety interlocks.

2. Do not place any object between the oven front face and the door or allow residue to accumulate on sealing surfaces. Wipe the sealing area frequently with a mild detergent, rinse and dry. Never use abrasive powders or pads.

3. When opened, the door must not be subjected to strain, for example, a child hanging on an opened door or any load could cause the oven to fall forward to cause injury and also damage to the door. Do not operate the oven if it is damaged, until it has been repaired by a trained service technician.
   It is particularly important that the oven closes properly and that there is no damage to the:
   i) Door(bent)
   ii) Hinges and Hookes(broken or loosened)
   iii) Door seals and sealing surfaces.

4. The oven should not be adjusted or repaired by anyone except a properly trained service technician.

QUESTIONS AND ANSWERS

*** Q : I accidentally ran my microwave oven without any food in it. Is it damaged?**

A : Running the oven empty for a short time will not damage the oven. However, it is not recommended.

*** Q : Can the oven be used with the glass tray or roller guide removed?**

A : No. Both the glass tray and roller guide must always be used in the oven before cooking.

*** Q : Can I open the door when the oven is operating?**

A : The door can be opened anytime during the cooking operation. Then microwave energy will be instantly switched off and the time setting will maintain until the door is closed.

*** Q : Why do I have moisture in my microwave oven after cooking?**

A : The moisture on the side of your microwave oven is normal. It is caused by steam from cooking food hitting the cool oven surface.

*** Q : Does microwave energy pass through the viewing screen in the door?**

A : No. The metal screen bounces back the energy to the oven cavity. The holes are made to allow light to pass through. They do not let microwave energy pass through.

*** Q : Why do eggs sometimes pop?**

A : When baking or poaching eggs, the yolk may pop due to steam build-up inside the yolk membrane. To prevent this, simply pierce the yolk with a toothpick before cooking. Never cook eggs without piercing their shells.

*** Q : Why this standing time recommended after the cooking operation has been completed?**

A : Standing time is very important.
With microwave cooking, the heat is in the food, not in the oven. Many foods build up enough internal heat to allow the cooking process to continue, even after the food is removed from the oven. Standing time for joints of meat, large vegetables and cakes is to allow the inside to cook completely, without overcooking the outside.

*** Q : What does "standing time" mean?**

A : "Standing time" means that food should be removed from the oven and covered for additional time to allow it to finish cooking. This frees the oven for other cooking.

*** Q : Why does my oven not always cook as fast as the microwave cooking guide says?**

A : Check your cooking guide again, to make sure you've followed directions exactly ; and to see what might cause variations in cooking time. Cooking guide times and heat settings are suggestions, to help prevent over-cooking... the most common problem in getting used to a microwave oven.
Variations in the size, shape and weights and dimensions could require longer cooking time. Use your own judgement along with the cooking guide suggestions to check whether the food has been properly cooked just as you would do with a conventional cooker.

*** Q : Will the microwave oven be damaged if it operates while empty?**

A : Yes. Never run it empty.

*** Q : Can I operate my microwave oven without the turntable or turn the turntable over to hold a large dish?**

A : No. If you remove or turn over the turntable, you will get poor cooking results. Dishes used in your oven must fit on the turntable.

*** Q : Is it normal for the turntable to turn in either direction?**

A : Yes. The turntable rotates clockwise or counterclockwise, depending on the rotation of the motor when the cooking cycle begins.

*** Q : Can I pop popcorn in my microwave oven? How do I get the best results?**

A : Yes. Pop packaged microwave popcorn following manufacture's guidelines. Do not use regular paper bags. Use the "listening test" by stopping the oven as soon as the popping slows to a "pop" every 1 or 2 seconds. Do not repop unpopped kernels. Do not pop popcorn in glass cookware.

COOKING INSTRUCTIONS

Utensil Guide

Only use utensils that are suitable for use in microwave ovens.
To cook food in the microwave oven, the microwaves must be able to penetrate the food, without being reflected or absorbed by the dish used. Care must therefore be taken choosing the utensil. If the utensil is marked microwave-safe, you do not need to worry. The following table lists various of utensil and indicates whether and how they should be used in a microwave oven.

Utensil	Safe	Comments
Aluminium foil	▲	Can be used in small quantities to protect areas against overcooking. Arcing can occur if the foil is too close to the oven wall or if too much foil is used.
Crust plate	●	Do not preheat for more than 8minutes.
China and earthenware	●	Porcelain, pottery, glazed earthenware and bone china are usually suitable, unless deco-rated with a metal trim.
Disposable polyester cardboard dishes	●	Some frozen foods are packaged in these dishes.
Fast-food packaging		
• Polystyrene cups containers	●	Can be used to warm food. Overheating may cause the polystyrene to melt.
• Paper bags or newspaper	×	May catch fire.
• Recycled paper or metal trims	×	May cause arcing.
Glassware		
• Oven-to-table ware	●	Can be used, unless decorated with a metal trim.
• Fine glassware	●	Can be used to warm foods or liquids. Delicate glass may break or crack if heated suddenly.
• Glass jars	●	Must remove the lid. Suitable for warming only.
Metal		
• Dishes	×	May cause arcing or fire.
• Freezer bag twist ties	×	
Paper		
• Plates, cups, napkins and Kitchen paper	●	For short cooking times and warming. Also to absorb excess moisture.
• Recycled paper	×	May cause arcing.
Plastic		
• Containers	●	Particularly if heat-resistant thermoplastic. Some other plastics may warp or discolour at high temperatures. Do not use Melamine plastic.
• Cling film	●	Can be used to retain moisture. Should not touch the food. Take care when removing the film as hot steam will escape.
• Freezer bags	▲	Only if boilable or oven-proof. Should not be airtight. Prick with a fork, if necessary.
Wax or grease-proof paper	●	Can be used to retain moisture and prevent spattering.

● : Recommended use
▲ : Limited Use
× : Not Recommended

USE YOUR MICROWAVE OVEN SAFELY

General Use

Do not attempt to defeat or tamper with safety interlocks.
Do not place any object between the oven front frame and the door or allow residue to build up on sealing surfaces. Wipe with a mild detergent, rinse and dry. Never use abrasive powders or pads.
Do not subject the oven door to strain or weight such as a child hanging on an open door.
This could cause the oven to fall forward resulting in injury to you and damage to the oven.

Do not operate the oven if door seals or sealing surfaces are damaged; or if door is bent; or if hinges are loose or broken.
Do not operate the oven empty. This will damage the oven.
Do not attempt to dry clothes, newspapers or other materials in the oven. They may catch on fire.
Do not use recycled paper products as they may contain impurities which may cause sparks or fires.
Do not hit or strike the control panel with hard objects. This can damage the oven.

Food

Never use your microwave oven for home canning. The oven is not designed for proper home canning. Improperly canned food may spoil and be dangerous to consume.
Always use the minimum recipe cooking time. It is better to undercook rather than overcook foods. Undercooked foods can be returned to the oven for more cooking. If food is overcooked, nothing can be done.
Heat small quantities of food or foods with low moisture carefully. These can quickly dry out, burn or catch on fire.
Do not heat eggs in the shell. Pressure may build up and eggs can explode.
Potatoes, apples, egg yolks and sausages are examples of food with non-porous skins.
These must be pierced before cooking to prevent bursting.
Do not attempt to deep fat fry in your microwave oven.
Always allow a standing time of at least 20 seconds after the oven has been switched off to allow the temperature to even out, stir during heating, if necessary, and ALWAYS stir after heating. To prevent eruptive boiling and possible scalding, you should put a spoon or glass stick into the beverages and stir before, during and after heating.
Do not leave the oven unattended while popping corn.
Do not pop corn in a paper bag unless it is the commercially prepared Microwave Popcorn product. The kernels can overheat and ignite a brown paper bag.
Do not put packaged Microwave Popcorn bags directly on the oven tray. Place the package on a microwave safe glass or ceramic plate to avoid overheating and cracking the oven tray.
Do not exceed the Microwave Popcorn manufacturers suggested popping time.
Longer popping does not yield more popcorn but it can result in scorch, burn of fire. Remember, the Popcorn bag and tray can be too hot to handle. Remove with caution and use pot holders.

ARCING

*If you see arcing, touch **STOP/CLEAR** pad or push the door open button, and correct the problem.*

Arcing is the microwave term for sparks in the oven.
Arcing is caused by:

- Metal or foil touching the side of the oven.
- Foil not molded to food (upturned edges act like antennas).
- Metal, such as twist-ties, poultry pins, or gold rimmed dishes, in the microwave.
- Recycled paper towels containing small metal pieces being used in the microwave.

MICROWAVING PRINCIPLES

Microwave energy has been used in this country to cook and reheat food since early experiments with RADAR in World War II. Microwaves are present in the atmosphere all the time, both naturally and manmade sources. Manmade sources include radar, radio, television, telecommunication links and car phones.

HOW MICROWAVES COOK FOOD

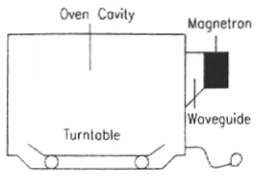

In a microwave oven, electricity is converted into microwave by the MAGNETRON.

▶ REFLECTION

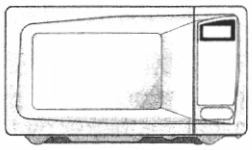

The microwaves bounce off the metal walls and the metal door screen.

▶ TRANSMISSION

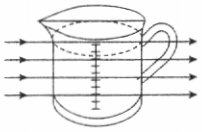

Then they pass through the cooking containers to be absorbed by the water molecules in the food, all foods contain water to a more or lesser extent.

▶ ABSORPTION

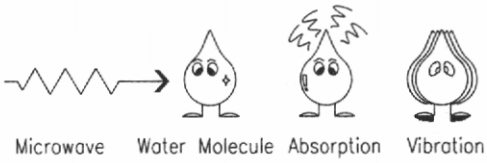

The microwaves cause the water molecules to vibrate which causes FRICTION, i.e. HEAT. This heat then cooks the food. Microwaves are also attracted to fat and sugar particles, and foods high in these will cook more quickly. Microwaves can only penetrate to a depth of 1 1/2 - 2 inches(4-5cm) and as heat spreads through the food by conduction, just as in a traditional oven, the food cooks from the outside inwards.

CONVERSION CHARTS

WEIGHT MEASURES	
15 g	1/2 oz.
25 g	1 oz.
50 g	2 oz.
100 g	4 oz.
175 g	6 oz.
225 g	8 oz.
450 g	1 lb.

VOLUME MEASURES	
30 ml	1 fl.oz.
100 ml	3 fl.oz.
150 ml	5 fl.oz. (1/4 pt)
300 ml	10 fl.oz. (1/2 pt)
600 ml	20 fl.oz. (1pt)

SPOON MEASURES	
1.25 ml	1/4 tsp
2.5 ml	1/2 tsp
5 ml	1 tsp
15 ml	1 tbsp

FLUID MEASUREMENTS		
1 Cup	= 8 fl.oz.	= 240 ml
1 Pint	= 16 fl.oz. (UK 20 fl.oz.)	= 480 ml (UK 560 ml)
1 Quart	= 32 fl.oz. (UK 40 fl.oz.)	= 960 ml (UK 1120 ml)
1 Gallon	= 128 fl.oz. (UK 160 fl.oz.)	= 3840 ml (UK 4500 ml)

COOKING TECHNIQUES

STANDING TIME

Dense foods e.g. meat, jacket potatoes and cakes, require standing time(inside or outside of the oven) after cooking, to allow heat to finish conducting to cook the center completely. Wrap meat joints and jacket potatoes in aluminium foil while standing. Meat joints need approx. 10-15 minutes, jacket potatoes 5 minutes. Other foods such as plated meal, vegetables, fish etc require 2-5 minutes standing. After defrosting food, standing time should also be allowed. If food is not cooked after standing time, return to the oven and cook for additional time.

MOISTURE CONTENT

Many fresh foods e.g. vegetables and fruit, vary in their moisture content throughout the season, particularly jacket potatoes. For this reason cooking times may have to be adjusted. Dry ingredients e.g. rice, pasta, can dry out during storage so cooking times may differ.

DENSITY

Porous airy foods heat more quickly than dense heavy foods.

CLING FILM

Cling film helps keep the food moist and the trapped steam assists in speeding up cooking times. Pierce before cooking to allow excess steam to escape. Always take care when removing cling film from a dish as the build-up of steam will be very hot.

SHAPE

Even shapes cook evenly. Food cooks better by microwave when in a round container rather than square.

SPACING

Foods cook more quickly and evenly if spaced apart. NEVER pile foods on top of each other.

STARTING TEMPERATURE

The colder the food, the longer it takes to heat up. Food from a fridge takes longer to reheat than food at room temperature.

LIQUIDS

All liquids must be stirred before and during heating. Water especially must be stirred before and during heating, to avoid eruption. Do not heat liquids that have previously been boiled. DO NOT OVERHEAT.

TURNING & STIRRING

Some foods require stirring during cooking. Meat and poultry should be turned after half the cooking time.

ARRANGING

Individual foods e.g. chicken portions or chops, should be placed on a dish so that the thicker parts are towards the outside.

QUANTITY

Small quantities cook faster than large quantities, also small meals will reheat more quickly than large portions.

PIERCING

The skin or membrane on some foods will cause steam to build up during cooking. These foods must be pierced or a strip of skin should be peeled off before cooking to allow the steam to escape. Eggs, potatoes, apples, sausages etc, will all need to be pierced before cooking. DO NOT ATTEMPT TO BOIL EGGS IN THEIR SHELLS.

COVERING

Cover foods with microwave cling film or a lid. Cover fish, vegetables, casseroles, soups. Do not cover cakes, sauces, jacket potatoes or pastry items.

DEFROSTING GUIDE

- ▶ Do not defrost covered meat. Covering might allow cooking to take place. Always remove outer wrap and tray. Use only containers that are microwave-safe.
- ▶ Begin defrosting whole poultry breast-side-down. Begin defrosting roasts fat-side-down.
- ▶ The shape of the package alters the defrosting time. Shallow rectangular shapes defrost more quickly than a deep block.
- ▶ After 1/3 of the defrost time has elapsed, check the food. Toy may wish to turn over, break apart, rearrange or remove thawed portions of the food.
- ▶ During defrost, the oven will prompt you to turn the over. At this point, open oven door and check the food. Follow the techniques listed below for optimum defrost results.
  Then, close oven door, touch the START pad to complete defrosting.
- ▶ When defrosted, food should be cool, but softened in all areas. If still slightly icy, return to microwave oven very briefly, or let stand a few minutes. After defrosting, allow food to stand 5-60 minutes if there are any icy areas.
  Poultry and fish may be placed under running cool water until defrosted
- ➪ ***Turn over*** : Roast, ribs, whole poultry, turkey breasts, hot dogs, sausages, steaks, or chops.
- ➪ ***Rearrange*** : Break apart or separate steaks, chops, hamburger patties, ground meat, chicken or seafood pieces, chunks of meat such as stew beef.
- ➪ ***Shield*** : Use small strips of aluminum foil to protect thin areas or edges of unevenly shaped foods such as chicken wings. To prevent arching, do not allow foil to come within 1-inch of oven walls or door.
- ➪ ***Remove*** : To prevent cooking, thawed portions should be removed from the oven at this point. This may shorten defrost time for food weighing less than 3 lbs.(1350g).

DEFROSTING CHART

Item & Weight	Defrosting Time	Standing Time	Special Techniques
BEEF			
Minced beef 1 lb./450g	10-12 min.	15-20 min.	Break apart and remove thawed portions with fork.
Stew Meat 1 1/2 lbs./675g	9-11 min.	25-30 min.	Separate and rearrange once.
Patties 4(4oz./110g)	7-8 min.	15-20 min.	Turn over after half the time.
PORK			
Spareribs 1 lb./450g	6-7 min.	25-30 min.	Separate and rearrange once.
Chops 4(5oz./125g)	7-8 min.	25-30 min.	Separate and turn over once.
Minced pork 1 lb./450g	9-10 min.	15-20 min.	Break apart and remove thawed portions with fork.
POULTRY			
Whole Chicken 2 1/2 lbs./1125g	20-22 min.	45-90 min.	Break side down. Turn over after half the time. Shield as needed.
Chicken Breasts 1 lbs./450g	9-10 min.	15-30 min.	Separate and rearrange once.
Fryer Chicken(cut up) 2 lbs./900g	12-14 min.	25-30 min.	Separate and rearrange once.
Chicken Thights 1 1/2 lbs./675g	12-14 min.	15-30 min.	Separate and rearrange once.
FISH & SEAFOOD			
Whole Fish 1 lb./450g	6-7 min.	15-20 min.	Turn over after half the time. Shield as needed.
Fish Fillets 1 1/2 lb./675g	7-8 min.	15-20 min.	Separate and turn over once.
Shrimp 1/2 lb./225g	3-4 min.	15-20 min.	Separate and rearrange once.

* The times are approximate because freezer temperatures vary.

COOKING & REHEATING CHART

Cooking chart

Item	Power Level	Cooking Time Per lb./450g	Special Instruction
MEAT			
Beef joint-Rare	P-80	9-11 min.	- Chilled meat and poultry should be removed from the refrigerator at least 30 minutes before cooking. - Always let the meat and poultry stand, covered after cooking.
-Medium	P-80	10-12 min.	
-well done	P-80	12-14 min.	
Pork Joint	P-HI	13-16 min.	
Bacon joint	P-HI	5-8 min.	
POULTRY			
Whole chicken	P-HI	8-10 min.	
Portions chicken	P-80	6-8 min.	
Breast (boned)	P-80	7-9 min.	
FISH			
Fish Fillets	P-HI	4-6 min.	- Brush a little oil or melted butter over the fish, or add 15~30ml(1-2 tbsp) lemon juice, wine, stock, milk or water. - Always let the fish stand, covered, after cooking
Whole Mackerel, Cleaned and prepared	P-HI	4-6 min.	
Whole Trout, Cleaned & Prepared	P-HI	5-7 min.	
Salmon steaks	P-HI	5-7 min.	

NOTE : The above times should be regarded only as a guide. Allow for difference in individual tastes and preferences. The times may vary due to the shape, cut, and composition of the food. Frozen meat, poultry and fish must be thoroughly thawed before cooking.

Reheating chart

- Baby food particularly needs to be checked carefully before serving to prevent burns.
- When heating pre-packaged ready-cooked foods, always follow the pack instructions carefully.
- If you freeze foods which were bought from the fresh or chilled counters, remember that they should be thoroughly thawed before following the heating instructions on the packed. It's worth putting a note on them so that other members of the household will remember too.
- Remember metal ties and transfer food from foil containers before reheating.
- Chilled(refrigerated) food takes longer to reheat than food at room temperature (such as just-cooled food or food from the store cupboard).
- All foods should be reheated using full microwave power.

Item	Cooking time	Special Instructions
Baby food 128g jar	20 sec.	Empty into a small serving bowl. Stir well once or twice during heating. Before serving, check the temperature carefully.
Baby milk 100ml / 4fl.oz. 225ml / 8fl.oz.	 20-30 sec. 40-50 sec.	Stir or shake well and pour into a sterilized bottle. Before serving, shake well and check the temperature carefully.
Sandwich roll or bun 1 roll	20-30 sec.	Wrap in paper towel and place on glass microwaveable rack. ***Note : Do not use recycled paper towels.**
Lasagna 1 serving (10 1/2 oz./300g)	5-7 min.	Place lasagna on microwaveable plate. Cover with plastic wrap and vent.
Casserole 1 cup 4 cups	 2-4 min. 6-8 min.	Cook covered in microwaveable casserole. Stir once halfway through cooking.
Mashed potatoes 1 cup 4 cups	 3-4 min. 7-9 min.	Cook covered in microwaveable casserole. Stir once halfway through cooking.
Baked beans 1 cup	3-4 min.	Cook covered in microwaveable casserole. Stir once halfway through cooking.
Ravioli or pasta in sauce 1 cup 4 cups	 4-5 min. 8-10 min.	Cook covered in microwaveable casserole. Stir once halfway through cooking.

VEGETABLE CHART

Use a suitable glass pyrex bowl with lid. Add 30-45ml cold water(2-3 tbsp.) for every 250g unless another water quantity is recommended - see table. Cook covered for the minimum time - see table. Continue cooking to get the result you prefer. Stir once during and once after cooking. Add salt, herbs or butter after cooking. Cover during a standing time of 3 minutes.
Hint : cut the fresh vegetables into even sized pieces. The smaller they are cut, the quicker they will cook.
All vegetables should be cooked using full microwave power.

Cooking Guide for fresh vegetables

Vegetables	Weight	Time	Comments
Broccoli	1/2 lb./250g 1 lb./500g	4-5 min 6-8 min	Prepare even sized florets. Arrange the stems to the centre.
Brussels sprouts	1/2 lb./250g	5-6 min	Add 60-75ml(5-6tbsp.) water.
Carrots	1/2 lb./250g	4-5 min	Cut carrots into even sized slices.
Cauliflower	1/2 lb./250g 1 lb./500g	4-5 min 6-8 min	Prepare even sized florets. Cut big florets into halves. Arrange stems to the centre.
Courgettes	1/2 lb./250g	4-5 min	Cut courgettes into slices. Add 30ml(2tbsp.) water or a knob of butter. Cook until just tender.
Egg plants	1/2 lb./250g	4-5 min	Cut egg plants into small slices and sprinkle with 1 tablespoon lemon juice.
Leeks	1/2 lb./250g	4-5 min	Cut leeks into thick slices.
Mushrooms	0.3 lb./125g 1/2 lb./250g	2-3 min 3-5 min	Prepare small whole or sliced mushrooms. Do not add any water. Sprinkle with lemon juice. Spice with salt and pepper. Drain before serving.
Onions	1/2 lb./250g	3-4 min	Cut onions into slices or halves. Add only 15ml(1tbsp.) water.
Pepper	1/2 lb./250g	3-5 min	Cut pepper into small slices.
Potatoes	1/2 lb./250g 1 lb./500g	4-6 min 6-8 min	Weigh the peeled potatoes and cut them into similar sized halves or quarters.
Turnip cabbage	1/2 lb./250g	5-7 min	Cut turnip cabbage into small cubes.

Cooking Guide for frozen vegetables

Vegetables	Weight	Time	Instructions
spinach	0.3 lb./125g	2-3 min	Add 15ml(1tbsp.) cold water.
broccoli	1/2 lb./250g	5-6 min	Add 30ml(2 tbsp.) cold water.
Peas	1/2 lb./250g	4-5 min	Add 15ml(1 tbsp.) cold water.
Green beans	1/2 lb./250g	5-6 min	Add 30ml(2t tbsp.) cold water.
Mixed vegetables (carrots/peas/corn)	1/2 lb./250g	4-5 min	Add 15ml(1ttbsp.) cold water.
Mixed vegetables (Chinese style)	1/2 lb./250g	5-6 min	Add 15ml(1 tbsp.) cold water.

RECIPES

TOMATO & ORANGE SOUP

1 oz.(25g) butter
1 medium onion, chopped
1 large carrot & 1 large potato, chopped
1 3/4lb(800g) canned, chopped tomatoes
juice and grated rind of 1 small orange
1 1/2pints(900ml) hot vegetable stock
salt and pepper to taste

1. Melt the in a large bowl on P-HI for 1 minute.
2. Add the onion, carrot and potato and cook on P-HI for 6 minutes. stir halfway through cooking.
3. Add the tomatoes, orange juice, orange rind and stock. Mix thoroughly. Season with salt and pepper to taste. Cover the bowl and cook on P-HI for 12 minutes. stir 2-3 times during cooking, until the vegetables are tender.
4. Blend and serve immediately.

FRENCH ONION SOUP

1 large onions, sliced
1 tbsp (15ml) corn oil
2 oz.(50g) plain flour
2 pints(1.2 liters) hot meat or vegetable stock
salt and pepper to taste
2 tbsp (30ml) parsley, chopped
4 thick slices French bread
2 oz.(50g) cheese, grated

1. Place the onion and oil a bowl, mix well and cook on P-HI for 2 minutes.
2. Stir in the flour to make a paste and gradually add stack. Season and add the parsley.
3. Cover the bowl and cook on P-80 for 12 minutes.
4. Pour the soup into serving bowls, submerge bread and sprinkle generously with cheese.
5. Cook on P-80 for 2 minutes, until the cheese has melted.

STIR FRIED VEGETABLES

1 tbsp(15ml) sunflower oil
2 tbsp (30ml) soy sauce
1 tbsp (15ml) sherry
1"(2.5cm) root ginger, peeled and finely grated
2 medium carrots, cut into fine strips
4 oz.(100g) button mushrooms, chopped
2 oz.(50g) beansprouts
4 oz.(100g) mange-tout
1 red pepper, seeded and thinly sliced
4 spring onions, chopped
4 oz.(100g) canned water chestnuts, sliced
1/4 head of chinese leaves, thinly sliced

1. Place the oil, soy sauce, sherry, ginger, garlic and carrots in a large bowl, mix thoroughly
2. Cover and cook on P-HI for 2-3 minutes, stirring once.
3. Add the button mushrooms, beansprouts, mange-tout, red pepper, spring onions, water chestnuts and chinese leaves. Mix thoroughly.
4. Cook on P-HI for 4-5 minutes, until the vegetables are tender. Stir 2-3 times during cooking.

Stir fried vegetables are ideally served with meat or fish.

HONEYED CHICKEN

4 boneless chicken breasts
2 tbsp(30ml) clear honey
1 tbsp(15ml) whole grain mustard
1/2 tsp(2.5ml) dried tarragon
1 tbsp(15ml) tomato puree
1/4 pint(150ml) chicken stock

1. Place the chicken breasts in a casserole dish.
2. Mix all remaining ingredients together and pour over the chicken. Salt and pepper to taste.
3. Cook on P-HI for 11-12 minutes. Rearrange and coat the chicken with the sauce twice during cooking.

BLUE CHEESE & CHIVE JACKETS

2 baking potatoes,
(approx.9 oz.(250g) each)
2 oz.(50g) butter
4 oz.(100g) blue cheese, chopped
1 tbsp(15ml) fresh chives, chopped
2 oz.(50g) mushrooms, sliced
salt and pepper to taste

1. Prick each potato in several places. Cook on P-HI for 10-11 minutes. Halve and scoop the flesh into a bowl, add the butter, cheese, chives, mushrooms, salt and pepper, mix thoroughly.
2. Pile mixture into the potato skins and place in a flan dish, on the rack.
3. Cook on P-50 for 10 minutes.

WHITE SAUCE

1 oz.(25g) butter
1 oz.(25g) plain flour
1/2 pint(300ml) milk
salt and pepper to taste

1. Place the butter in a bowl and cook on P-HI for 1 minute, until melted.
2. Stir in the flour and whisk in the milk. Cook on P-HI for 3-4 minutes, stirring every 2 minutes until thick and smooth. Season with salt and pepper to taste.

STRAWBERRY JAM

1 1/2 lb.(675g) strawberries, hulled
3 tbsp(45ml) lemon juice
1 1/2 lb.(675g) caster sugar

1. Place strawberries and lemon juice in a very large bowl, heat on P-HI for 5 minutes, or until the fruit has softened. Add sugar, mix well.
2. Cook on P-70 for 20-25 minutes, until setting point*is reached, stir every 4-5 minutes.
3. Pour into hot, clean jars. Cover, seal and label.

** setting point : To determine setting point, place 1 tsp(5ml)jam onto chilled saucer. Allow to stand for 1 minute. Move surface of jam gently with your finger, if the surface wrinkles setting point has been reached.*

PLAIN MICROWAVE CAKE

4 oz.(100g) margarine
4 oz.(100g) sugar
1 eggs
4 oz.(100g) self raising flour, sifted
2-3 tbsp(30-45ml) milk

1. line the base of 8" (20.4cm) cake dish with grease-proof paper.
2. Cream the margarine and sugar together until light and fluffy. Beat in the eggs and fold in the sifted flour alternately with the milk.
3. Pour into prepared container. Cook on P-HI for 3-4 minutes, until a skewer comes out cleanly.
4. Leave the cake to stand for 5 minutes before turning out.

OMELETTS

1/2 oz.(15g) butter
4 eggs
6 tbsp(90ml) milk
salt & pepper

1. Whisk together eggs and milk.
2. Place butter in 10"(26cm) flan dish. Cook on P-HI for 1 minute, until melted. Coat the dish with the melted butter.
3. Pour omelette mixture into flan dish. Cook on P-HI for 2 minutes. whisk mixture and cook again on P-HI for 1 minutes.

SCRAMBLED EGG

1/2 oz.(15g) butter
2 eggs
2 tbsp(30ml) milk
salt & pepper

1. Melt the butter in a bowl on P-HI for 1 minute.
2. Add the eggs, milk and seasoning and mix well.
3. Cook on P-HI for 2 minutes, stirring every 30 seconds.

SAVORY MINCE

1 small onion, diced
1 clove garlic, crushed
1 tsp(5ml) oil
7 oz.(200g) can chopped tomatoes
1 tbsp(15ml) tomato puree
1 tsp(5ml) mixed herbs
8 oz.(225g) minced beef
salt and pepper

1. Place onion, garlic and oil in casserole, and cook on P-HI for 2 minutes or until soft.
2. Place all other ingredients in casserole. Stir well.
3. Cover and cook on P-HI for 4 minutes then P-50 for
   7-10 minutes or until the meat is cooked.

Magic Chef™
SO RIGHT AT HOME.™

Microwave Oven Warranty

MC Appliance corp. warrants each new Microwave Oven to be free from defects in material and workmanship and agrees to remedy any such defect or to furnish a new part(s) (at the company's option) for any part(s) of the unit that has failed during the warranty period. Parts and labor expenses are covered on this unit for a period of one year after the date of purchase. In addition MC Appliance corp, Inc. warrants the Magnetron (parts only) to be free from defects in material and workmanship for a period of 8 years. The consumer is responsible for all labor and transportation expenses related to the diagnosis and replacement of the Magnetron after the initial one- year warranty expires. If in the event the unit requires replacement or refund under the terms of this warranty the consumer is responsible for all transportation expenses to return the unit to our factory prior to receiving a replacement unit or refund. **A copy of the dated sales receipt / invoice is required to receive warranty service, replacement or refund.**

This warranty covers appliances in use within the continental United States, Puerto Rico and Hawaii. The warranty does not cover the following:

- Damages due to shipping damage or improper installation.
- Damages due to misuse or abuse.
- Content losses due to failure of the unit.
- Repairs performed by unauthorized service agents.
- Service calls that do not involve defects in material and workmanship such as instruction on proper use of the product or improper installation.
- Replacement or resetting of house fuses or circuit breakers.
- Failure of this product if used for other then its intended purpose.
- Disposal cost of failed units not returned to our factory.
- Any delivery / installation costs incurred as the result of a unit that fails to perform as specified.

This warranty is in lieu of all warranties expressed or implied and no representative or person is authorized to assume for us any other liability in connection with the sale of this product. Under no circumstances is the consumer permitted to return this unit to the factory without prior written consent from MC Appliance corp.

Model	Parts	Labor	Magnetron (Part Only)	Type of Service
MCD990ARB MCD990ARW	One-Year	One-Year	Eight Years	Carry In

For Service or Assistance please call 888 775-0202
Or visit us on the web at www.mcappliance.com