Hisense

4K HDR Smart TV
Quick Setup Guide

Help Hisense improve the environment by reducing paper waste. For detailed instructions and feature descriptions, refer to the E-Manual on TV. Before using the TV, please read this guide carefully and keep it for future reference.

ES-A214914-1

English

Copyright statement

© 2021 Hisense Company Ltd. All Rights Reserved.
All material in this Quick Setup Guide is the property of Hisense Company Ltd. and its subsidiaries, and is protected under the laws of the US, Canada, Mexico and international copyright and/or other intellectual property laws. Reproduction or transmission of the materials, in whole or in part, in any manner, electronic, print, or otherwise, without the prior written consent of the Hisense Company Ltd. is a violation of the rights of Hisense Company Ltd. under the aforementioned laws.
No part of this publication may be stored, reproduced, transmitted or distributed, in whole or in part, in any manner, electronic or otherwise, whether or not for a charge or for other or no consideration, without the prior written permission of Hisense Company Ltd. Requests for permission to store, reproduce, transmit or distribute materials may be made to one of the following addresses:

USA:
Hisense USA Corporation
7310 McGinnis Ferry Road
Suwanee, GA 30024
CANADA:
Hisense Canada Co., Ltd
2283 Argentia Road, Unit 16
Mississauga, ON, Canada
L5N 5Z2
MEXICO
IMPORTER:
Hisense Mexico S. de R.L. de C.V.
Blvd. Miguel de Cervantes Saavedra No 301
Torre Norte Piso 2, Col. Ampliación Granada
Miguel Hidalgo, Ciudad de México, C.P. 11520
RFC: HME110512IY3
TEL: (52) (55) 5531-3515

Hisense, and any and all other Hisense product names, logos, slogans or marks are registered trademarks of Hisense Company Ltd. and its subsidiaries. All other trademarks are the property of their respective holders.

Disclaimer

Disclaimer: Subscriptions or other payments may be required to access content through some applications. Some or all of the included or downloaded application services in this Hisense device may not function depending on the Internet connection, local limitations of included applications or other reasons outside of Hisense's control. HISENSE EXPRESSLY DISCLAIMS RESPONSIBILITY FOR ANY APPLICATION SERVICE FROM FUNCTIONING AT ANY TIME, FOR CONTENT IN ANY APPLICATION SERVICE, FOR DISRUPTIONS OF SERVICE, LOCAL OR REGIONAL LIMITATIONS, WARRANTIES OF TITLE, NO INFRINGEMENT, AND FOR IMPLIED WARRANTIES OF MERCHANTABILITY OR FITNESS FOR A PARTICULAR PURPOSE. By purchasing this device, you accept such Disclaimer without any claim on Hisense at any time.

This Quick Setup Guide supports the following models:

43A6H / 43A65H / 43A68H / 50A6H / 50A65H / 50A68H / 55A6H / 55A65H / 55A68H / 65A6H / 65A65H / 65A68H / 75A6H / 75A65H / 75A68H

Table of Contents

What's in the box 3

Getting started 4

- Step 1. Attach stand or mount 4
- Step 2. Connect devices to your TV 7
- Step 3. Get your remote ready 11
- Step 4. Power on the TV 14
- Step 5. Complete the first-time setup 14
- Step 6. Establish a network connection 14
- Step 7. Enjoy your TV! 16

Troubleshooting 17

Product Specifications 18

Certification and Compliance 21

Congratulations on the purchase of your Hisense TV! If you would like to know 'all things Hisense', contact us using the support info:
The model and serial number of the TV is located on the back and/or on one side of the TV. We recommend that you record this if you ever need service.

Country	Customer Care Center	Hisense Support Page	Register your TV
U.S.A	• **Phone:** 1-888-935-8880 • **Hours of Operation:** Monday - Friday: 9 AM to 9 PM EST Saturday - Sunday: 9 AM to 6 PM EST • **Service Email:** Service@hisense-usa.com	http://www.hisense-usa.com/support/	http://www.hisense-usa.com/support/register
CANADA	• **Phone:** 1-855-344-7367 • **Hours of Operation:** Monday - Friday: 8 AM to 8 PM EST • **Service Email:** canadasupport@hisense.com	http://www.hisense-canada.com/support/	http://www.hisense-canada.com/support/productReg.asp
MEXICO	• **Phone:** 800-008-8880 • **Hours of Operation:** Monday - Friday: 9:00-21:00 hrs Saturday: 9:00-15:00 hrs • **Service Email:** servicio@hisense.com.mx	https://hisense.com.mx/support/ *Scan to download user manual	https://hisense.com.mx/support/register

Disclaimer: *This Quick Setup Guide is intended as a general guideline to help you set up your TV. Images throughout this document are for illustrative purposes only and may differ from the actual product.*

What's in the box

Your Hisense TV comes with the following items:

- TV
- 1 set of AAA(1.5Vcc) batteries
- remote control
- Quick Setup Guide (this document)
- 2 base stands
- Important Safety Information and Warranty Card
- 4 screws (M4×16 for 43")(109.2 cm)
- 4 screws (M4×12 for 50"/55")(127.0 cm/139.7 cm)
- 4 screws (M5×12 for 65"/75")(165.1 cm/190.5 cm)
- power cord

IMPORTANT:

To prevent accidentally discarding items that came with your TV, be sure to **check ALL of the foam** in the carton box.

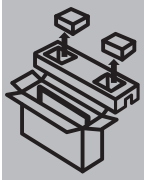

- Please check foam for accessories before discarding.
- Veuillez vérifier la mousse pour qu'il n'y ait pas d'accessoires avant de la jeter.
- Antes de desechar la espuma, asegúrese de retirar todos los accesorios.

You will also need the following items (which are not included) to set up your TV:

- Wireless router (not included) for Internet connectivity
- Phillips screwdriver (not included) to secure the TV stand
- Not all connection cables are included. Some cables are sold separately to connect external devices to the TV.
- Wall mount bracket and screws (not included) if you prefer to mount the TV on the wall

Getting started

Step 1. Attach stand or mount

Before you start using your TV, attach your TV stand or mount it on the wall.

CAUTION:

- Disconnect the AC power cord before installing a stand or a wall mount bracket.
- The LED display on your TV is fragile. Make sure the TV screen is not scratched or damaged by hard objects or from pressure.
- After the installation is complete, make sure the TV is steady on a table or firmly attached to a wall mount, before removing all protective film, if any.

Attach the TV stand

To attach the TV stand legs to your TV:

1. Carefully place your TV face down on a clean, soft and flat surface.
2. Insert the TV base stands into the bottom slots on your TV.
3. Use the screws provided to secure each leg tightly.

43"/50"/55" (109.2 cm/127.0 cm/139.7 cm)

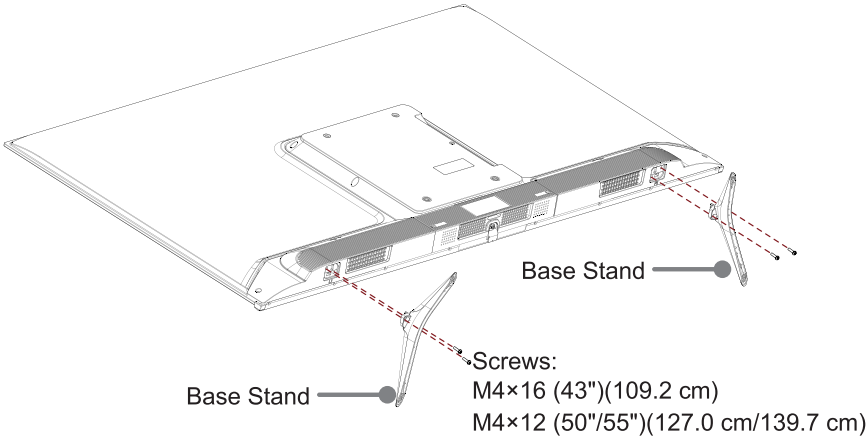

Note: If your table is long enough to place the TV on top of, then insert the base stands into the screw holes ‘A’ that are shown in the illustration. If your table is NOT long enough, then insert the base stand into the screw holes ‘B’ that are shown in the illustration. Note that these two installation methods types cannot be mixed.

65" (165.1 cm)

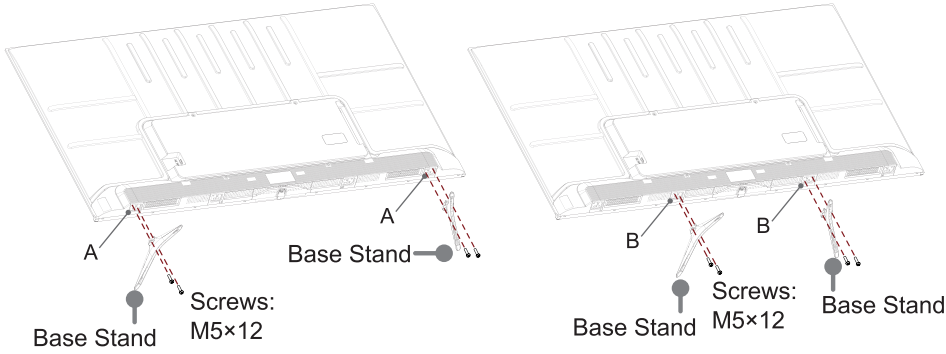

75" (190.5 cm)

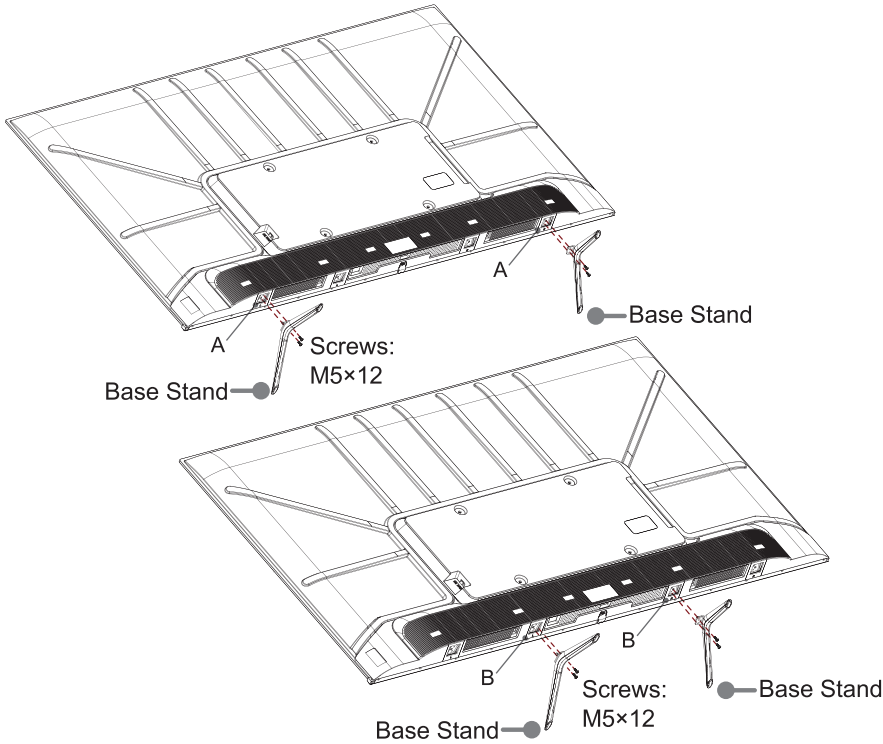

Attach the wall mount bracket (not included)

Before you begin the third-party manufacturer instructions, be sure to do the following things:

1. Place the TV face down on a clean, safe and cushioned surface.
2. Remove the TV stand if you have already attached it.
3. Place spacers (not included) in the corresponding bracket holes.

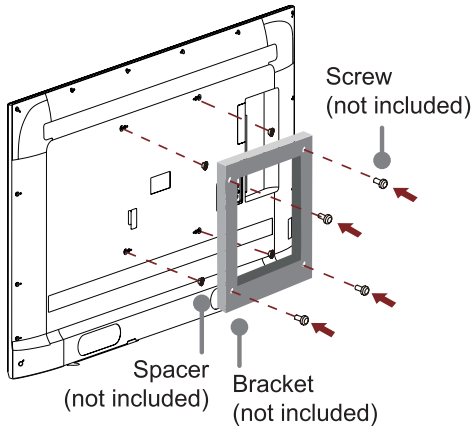

CAUTION:

- Follow instructions provided with the wall mount bracket. If it is not correctly mounted, the TV may fall and cause property damage or personal injury.
- When you attach the mount, be sure to use spacers (provided by the third-party manufacturer) between the TV and the bracket.
- To prevent internal damage to the TV and to ensure it is mounted securely, be sure to use fixing screws (not included) that are 8.0 - 10.0 mm (43"/50"/55")(109.2 cm/127.0 cm/139.7 cm) or 9.5 - 11.5 mm (65"/75")(165.1 cm/190.5 cm) in length when measured from the attaching surface of the rear cover.

8.0 - 10.0 mm (43"/50"/55")(109.2 cm/127.0 cm/139.7 cm)
9.5 - 11.5 mm (65"/75")(165.1 cm/190.5 cm)

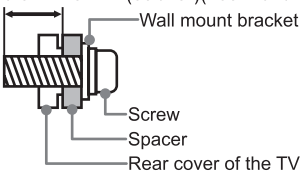

Wall mount hole pattern(mm)	200 × 300 (43"/50"/55")(109.2 cm/127.0 cm/139.7 cm) 400 × 300 (65"/75")(165.1 cm/190.5 cm)
Wall mount screw size	M6

- We do not recommend hanging the TV on a slanted wall, and when wall mounting make sure your television remains parallel to the wall and does not lean forward.

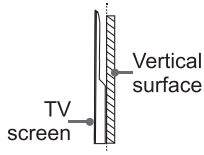

NOTE:

- If you have additional questions, please contact the wall mount manufacturer or the retailer from which you purchased the TV.
- The diameter and length of the screws differ depending on the wall mount bracket model.

Step 2. Connect devices to your TV

Check to ensure that you have connected right cables for right ports securely. Loose connections can affect the quality of the picture image and color.

43"/50"/55" (109.2 cm/127.0 cm/139.7 cm)

Back View

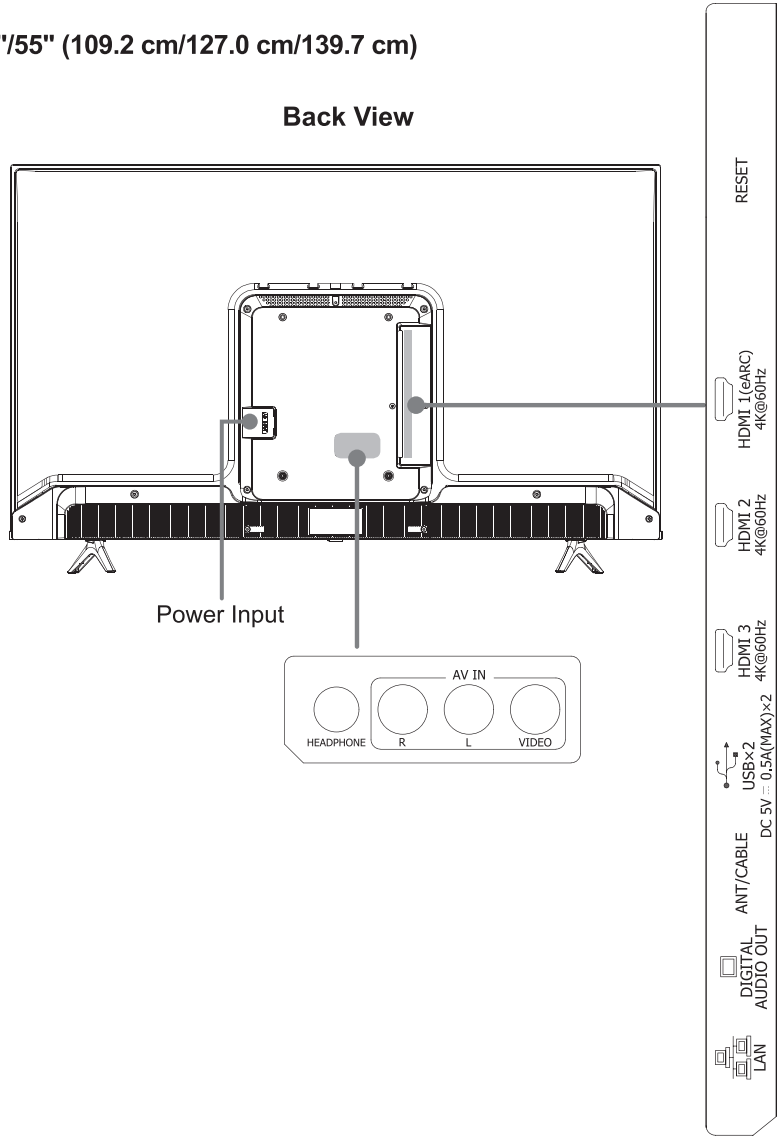

65"/75" (165.1 cm/190.5 cm)

Back View

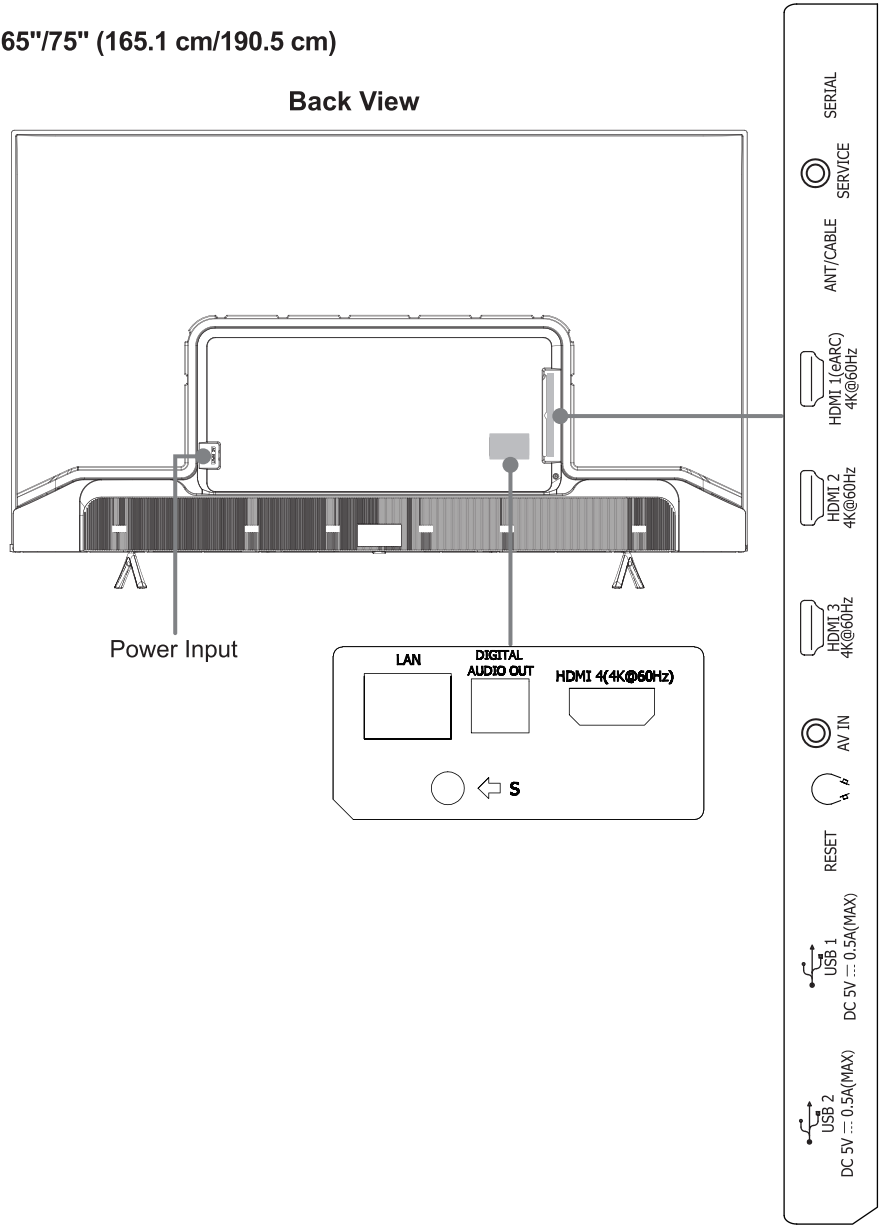

TV label		Port	Cable	External Equipment	Brief Description
ANT/CABLE				Antenna VHF/UHF Antenna Cable ANT OUT	Connect an outdoor VHF/ UHF antenna.
HDMI				VCR DVD Player/Recorder Video Camera Set-top Box Satellite antenna cable Satellite Receiver	Connect a High Definition Multimedia Interface (HDMI) cable from an external device.
AV IN	VIDEO		Yellow		Connect a composite video cable and left-right audio cables from an external AV device.
	L		White		
	R		Red		
AV IN			Red(R) White(L) Yellow(Video)		
DIGITAL AUDIO OUT				Audio Amplifier Speaker	Connect an optical cable from an external digital audio system.

TV label	Port	Cable	External Equipment	Brief Description
HEADPHONE				Connect headphones to hear audio from the TV. Headphones with microphones are not supported.
USB			Connect a USB device for browsing photos, music and movies. Hard disks with a total current consumption or impulse current consumption greater than 500mA are not supported.	
LAN				Connect an Ethernet cable to access a network or the Internet. The TV also has a wireless connectivity feature.
SERVICE		This port is not available for you to connect an external device, but can only be used by factory for testing purposes. This port may not be available in some models.		
RESET		Power off / restart (quick press) Reset your TV back to the factory setting (long press for 5 seconds)		
SERIAL		Service use only.		

Step 3. Get your remote ready

The following table shows the buttons on your remote control and describes what they are for.

BUTTON	***DESCRIPTION***
⏻	Power on/off
•	Microphone / Indicator
INPUT	Change TV input source
	Google Assistant of TV
	Accounts & Sign In or switch profile
	Access the settings (direct or through the dashboard in GTV) from any place in the system
^ / v / < / >	D-pad (up/down/left/right navigation buttons)
OK	Confirmation button
←	Return to the previous place in the menu or app
	Press to display the Home screen
	Return to Live TV/Enter to Live tab in launcher/Display the Electronic Program Guide(if support) *
^ VOL v	Volume (up/down)
^ CH v	Channel (up/down)
	Mute and restore sound Press and hold to display Accessibility menu
	Press to enter Menu
▶II	Media content control function buttons
123	Enter Channels/input numbers and special function buttons
App	Quick access buttons to apps

NOTE:

- Buttons listed here are for reference only. Actual remote control may vary depending on model, country.
- * Pressing the button in different scenarios will have different responses.

Insert the batteries

1. Take off the back cover to open the battery compartment of the remote control.
2. Insert two AAA(1.5Vcc) size batteries. Make sure to match the (+) and (-) ends of the batteries with the (+) and (-) ends indicated in the battery compartment.
3. Restore the battery compartment cover.

Important information about the remote and batteries

- **Discard batteries in a designated disposal area. Do not throw them into a fire.**
- **Remove old batteries immediately to prevent them from leaking into the battery compartment.**
- **If you do not intend to use the remote control for a long time, then remove the batteries.**
- **Battery chemicals can cause a rash. If the batteries leak, clean the battery compartment with a cloth. If chemicals touch your skin then wash it immediately.**
- **Do not mix old and new batteries.**
- **Do not mix alkaline, standard (carbon-zinc) or rechargeable (NiCd, NiMH, etc.) batteries.**
- **Do not continue using the remote if it gets warm or hot.**
- **Call our Support Center immediately on the support website.**

Remote control range information

- The remote control can work at a distance of up to 26 feet (792.5 cm) in front of the TV set.
- It can work at a 30 degree horizontal or vertical angle.

Program your Universal Cable or Satellite Remote Control to operate your new television (only for USA)

If you would like to program your other household remote controls to your new television, please refer to the User Manual supplied by your Cable or Satellite provider. It should include instructions on how to program their remote to your television.
A list of codes for the most common Cable and Satellite providers are listed below. Use the code that is associated with your Cable or Satellite provider (if applicable).
DIRECTV.....0178, 10178, 10019, 10748, 11314, 11660, 11710, 11780, 12049, 10171, 11204, 11326, 11517, 11564, 11641, 11963, 12002, 12183
Time Warner Cable.....386, 0178, 10178, 400, 450, 461, 456, 0748, 1463, 0463, 10463
Comcast.....0178, 10178, 10463, 11463, 10748, 11314, 11660, 10171, 11204, 11326, 11517, 11641, 11780, 11785, 11892, 11963, 12002
Cox Communications.....0178, 10178, 1326, 1463

Dish Network.....505, 627, 538, 720, 659
If the code associated with your Cable or Satellite provider is not listed, does not work or you cannot locate the instructions to program your remote, call your local Cable or Satellite provider's customer service center.
If your Cable or Satellite provider does not have a code available, please contact us at one of the phone numbers on Page 2.

Using your Cable Set-top Box or Satellite Receiver Remote as a 'Universal' Remote

If you prefer to use your Cable Set-top Box or Satellite Receiver Remote as a 'Universal' Remote, then visit the Support page to view a list of the codes.

Pairing the remote control

1. Pair the remote to the TV after you power it on for the first time, there will be instructions on how to pair the remote.
2. If your remote fails to pair with TV, keep the remote within 10 feet (304.8 cm) from the TV, press and hold the [←] button and [⌂] button at the same time at least 3 seconds to start pairing.
3. If the remote pairs successfully, a confirmation will display on the screen. If it does not pair successfully, an unsuccessful message will display. Repeat step 2, or you can check the **Bluetooth** is set **On** by pressing [⚙] button to select **Settings** > **Remotes & Accessories** > **Bluetooth** to **On**.

NOTE:

- If an unknown error occurs with the remote, it could have been caused by interference. Try to remove what's causing the interference and pair the remote again.
- If an unknown error occurs with the remote control while the battery power is normal, you can take out the batteries and press any key for 1~2 seconds, and insert them back. The remote control can work normally.
- The remote cannot be paired to the TV while the TV is in the standby mode.

Step 4. Power on the TV

Connect your power cord to the TV and plug it into a power outlet. Your TV will display a launch screen showing the Hisense logo.

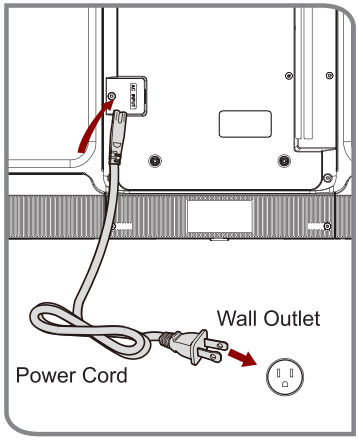

Step 5. Complete the first-time setup

The first time you turn on your TV, there is a guided setup to make it easy to connect your TV to the Internet and complete the setup of your TV.

Step 6. Establish a network connection

1. Press the **Home** button on the remote control, and select the ⚙ icon to select **Settings** to enter the Settings menu.
2. Select **Network & Internet.**

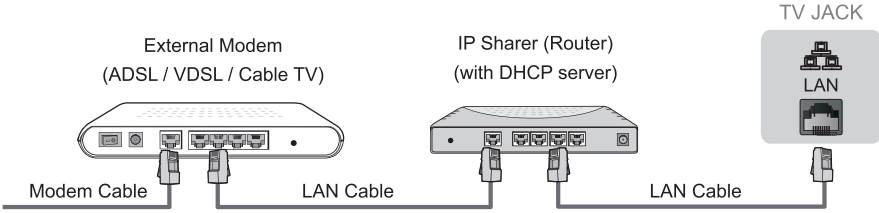

Establish a wired network connection

Automatically obtain an IP address

1. If you connect to the wired network, the TV will automatically obtain an IP address and connect to the network.
   NOTE: The default option of IP Settings Mode is DHCP.
2. If the connection fails, “**Not Connected**” will display for the Ethernet status. Retry or enter the **IP settings**, and select **Static** to input the information again.

Manually enter the IP address

1. Enter the **IP settings** to select **Static.**
2. Enter the IP address, Gateway, Network prefix length, DNS 1 and DNS 2 in the menu.

Establish a wireless network connection

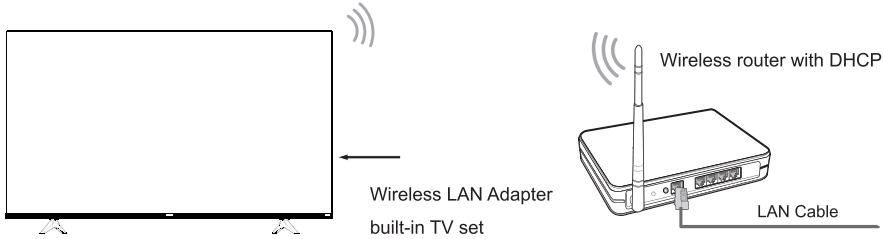

The TV can directly receive network signals via wireless router.

1. Turn on your Wi-Fi.
2. The list of networks will display automatically.
3. Select a wireless network from the list, input the password.
4. If the network connection does not appear in the list, select **See all** to display all the list, or select **Add new network** to input a Wi-Fi name, select the type of security mode, and enter password.

Close the network connection

Unplug the network cable or turn off your Wi-Fi. The network connection will close.

Step 7. Enjoy your TV!

Now that you've completed the first-time setup, your Home screen is your starting point for using your TV. Your Hisense TV provides a variety of entertainment options, so you'll always find something new. Use your TV to watch live channels, access video on demand to watch movies, and much more.

Press the Home button on your remote to get started.

Text-to-Speech (TTS) and Video Description functionalities on TV

Text-to-Speech (TTS) and Video Description can help you to navigate the menus on the screen and hear an audio description of relevant programs. Text-to-Speech can convert written text into voice to help visually impaired people listen to the information they are unable to read. In addition, the Video Description has an audio narration added to certain programs that will describe the main visual elements which visually impaired users may not be able to see.

Follow the steps below to enable the functions:

1. Press the [⚙] button on your remote to select **Settings.**

2. Next, select **System** to enter the **Accessibility** menu.

3. Select **TalkBack** to turn the Menu Audio on or off by selecting the appropriate choice that is presented.

or you can:

1. Press the [**INPUT**] button on your remote**,** select **TV.**

2. Next, Press the menu button to select **Video Description** to turn Video Description on or off by selecting the appropriate choice that is presented.

https://www.hisense-usa.com/text-to-speech-hisense-android-tvs-9612-4

Troubleshooting

If you are having trouble with your TV, first try turning it off and on again. If this does not fix the problem, check the tips in the following table. If your problem is not listed in the following table, then contact us at one of the phone numbers on Page 2.

Issues	Possible solutions
No sound or picture	• Check if the power cord is plugged into a powered AC outlet. • Press the Power button on the remote control to activate the unit from 'Standby' mode. • Check to see if the LED light is on or not. If it is, then the TV is receiving power.
I have connected an external source to my TV and I get no picture and/or sound.	• Check for the correct output connection on the external source and for the correct input connection on the TV. • Make sure you have made the correct selection for the input mode for the incoming signal.
When I turn on my TV, there is a delay for a few seconds before the picture appears. Is this normal?	• Yes, this is normal. The TV is initializing and searching for previous setting information.
The picture is normal but there is no sound	• Check the volume settings. • Check if 'Mute' mode is set to On.
Sound but no picture or black and white picture	• If the picture is black and white, unplug the TV from the AC outlet and replug it after 60 seconds. • Check that the Color is set to 50 or higher. • Try different TV channels.
The sound and/or picture is distorted or appears wavy	• An electric appliance may be affecting the TV. Turn off any appliances that are nearby and move it farther away from the TV. • Insert the power plug of the TV set into another power outlet.
The sound and picture is blurry or cuts out	• If using an external antenna, check the direction, position and connection of the antenna. • Adjust the direction of your antenna or reset or fine tune the channel.
A horizontal or vertical stripe appears on the picture and/or the picture is shaking	• Check if there is an appliance or electric tool nearby that is causing interference.
The plastic cabinet makes a "clicking" type of sound	• The 'click' sound can occur when the temperature of the television changes. This change causes the television cabinet to expand or contract, which makes the sound. This is normal and the TV is OK.
The remote control does not work	• Confirm that TV still has power and is operational. • Change the batteries in the remote control. • Check if the batteries are correctly installed.

Product Specifications

Model Name		43A6H 43A65H 43A68H	50A6H 50A65H 50A68H
Dimension (W × H × D)	Without Stand	37.9 × 22.0 × 2.9 inches (963 × 560 × 74 mm)	44.0 × 25.4 × 2.9 inches (1 117 × 646 × 74 mm)
	With Stand	37.9 × 24.2 × 7.7 inches (963 × 614 × 196 mm)	44.0 × 27.9 × 8.9 inches (1 117 × 709 × 225 mm)
Weight	Without Stand	15.0 lbs (6.8 kg)	21.6 lbs (9.8 kg)
	With Stand	15.2 lbs (6.9 kg)	22.0 lbs (10.0 kg)
TV Stand Width (W × D)		32.9 × 7.7 inches (835 × 196 mm)	38.0 × 8.9 inches (964 × 225 mm)
Class		43" (109.2 cm)	50" (127.0 cm)
Active Screen Size (Diagonal)		42.5 inches (107.9 cm)	49.5 inches (125.7 cm)
Screen Resolution		3840 × 2160	
Audio Power		7 W + 7 W	8 W + 8 W
Power consumption		100 W	110 W
Power Supply		120 V ~ 60 Hz	
Connectivity		Built-in Wireless feature (2x2 dual band)	
Ports		3 HDMI ports, 2 USB ports, 1 LAN port for Ethernet, 1 Digital Audio Output, 1 RF Input, 1 Headphone Audio Output, 1 RCA Composite Video Input , 1 left/right Audio Input for Composite, 1 RESET port	
Receiving Channels		VHF: 2 - 13, UHF: 14 - 69, CATV: 1 - 125 Digital Terrestrial Broadcast (8VSB): 2 - 69 Digital cable (64/256 QAM): 1 - 135	
Tuner Type		Frequency synthesized	
Receiving System		Analog: NTSC Digital: ATSC/QAM	
Operating Temperature		41°F - 95°F(5°C - 35°C)	
Operating Humidity		20% to 80% non-condensing	
Storage Temperature		5°F to 113°F(-15°C to 45°C)	
Storage Humidity		10% to 70%, non-condensing	

Disclaimer: *All products, product specifications, and data are subject to change without notice to improve reliability, function, design or otherwise.*

Product Specifications

Model Name		55A6H 55A65H 55A68H	65A6H 65A65H 65A68H
Dimension (W × H × D)	Without Stand	48.5 × 28.0 × 2.9 inches (1 233 × 711 × 74 mm)	57.2 × 32.8 × 2.9 inches (1 452 × 834 × 74 mm)
	With Stand	48.5 × 30.4 × 8.9 inches (1 233 × 773 × 226 mm)	57.2 × 35.3 × 11.5 inches (1 452 × 896 × 291 mm)
Weight	Without Stand	24.9 lbs (11.3 kg)	36.4 lbs (16.5 kg)
	With Stand	25.4 lbs (11.5 kg)	36.8 lbs (16.7 kg)
TV Stand Width (W × D)		39.8 × 8.9 inches (1 012 × 226 mm)	25.3 × 11.5/50.3 × 11.5 inches (642 × 291/1 277 × 291 mm)
Class		55" (139.7 cm)	65" (165.1 cm)
Active Screen Size (Diagonal)		54.6 inches (138.7 cm)	64.5 inches (163.8 cm)
Screen Resolution		3840 × 2160	
Audio Power		8 W + 8 W	10 W + 10 W
Power consumption		125 W	150 W
Power Supply		120 V ~ 60 Hz	
Connectivity		Built-in Wireless feature (2x2 dual band)	
Ports		3 HDMI ports, 2 USB ports, 1 LAN port for Ethernet, 1 Digital Audio Output, 1 RF Input, 1 Headphone Audio Output, 1 RCA Composite Video Input , 1 left/right Audio Input for Composite, 1 RESET port	4 HDMI ports, 2 USB ports, 1 LAN port for Ethernet, 1 Digital Audio Output, 1 RF Input, 1 Headphone Audio Output, 1 AV IN port, 1 RESET port, 1 SERIAL port
Receiving Channels		VHF: 2 - 13, UHF: 14 - 69, CATV: 1 - 125 Digital Terrestrial Broadcast (8VSB): 2 - 69 Digital cable (64/256 QAM): 1 - 135	
Tuner Type		Frequency synthesized	
Receiving System		Analog: NTSC Digital: ATSC/QAM	
Operating Temperature		41°F - 95°F(5°C - 35°C)	
Operating Humidity		20% to 80% non-condensing	
Storage Temperature		5°F to 113°F(-15°C to 45°C)	
Storage Humidity		10% to 70%, non-condensing	

Disclaimer: *All products, product specifications, and data are subject to change without notice to improve reliability, function, design or otherwise.*

Product Specifications

Model Name		75A6H 75A65H 75A68H
Dimension (W × H × D)	Without Stand	66.0 × 38.0 × 3.3 inches (1 677 × 966 × 85 mm)
	With Stand	66.0 × 41.0 × 14.1 inches (1 677 × 1 041 × 357 mm)
Weight	Without Stand	57.3 lbs (26.0 kg)
	With Stand	58.4 lbs (26.5 kg)
TV Stand Width (W × D)		23.7 × 14.1/45.7 × 14.1 inches (603 × 357/1 160 × 357 mm)
Class		75" (190.5 cm)
Active Screen Size (Diagonal)		74.5 inches (189.2 cm)
Screen Resolution		3840 × 2160
Audio Power		12 W + 12 W
Power consumption		240 W
Power Supply		120 V ~ 60 Hz
Connectivity		Built-in Wireless feature (2x2 dual band)
Ports		4 HDMI ports, 2 USB ports, 1 LAN port for Ethernet, 1 Digital Audio Output, 1 RF Input, 1 Headphone Audio Output, 1 AV IN port, 1 RESET port, 1 SERIAL port
Receiving Channels		VHF: 2 - 13, UHF: 14 - 69, CATV: 1 - 125 Digital Terrestrial Broadcast (8VSB): 2 - 69 Digital cable (64/256 QAM): 1 - 135
Tuner Type		Frequency synthesized
Receiving System		Analog: NTSC Digital: ATSC/QAM
Operating Temperature		41°F - 95°F(5°C - 35°C)
Operating Humidity		20% to 80% non-condensing
Storage Temperature		5°F to 113°F(-15°C to 45°C)
Storage Humidity		10% to 70%, non-condensing

Disclaimer: *All products, product specifications, and data are subject to change without notice to improve reliability, function, design or otherwise.*

Certification and Compliance

FCC Notice

This device has been tested and found to comply with the limits for a Class B digital device pursuant to Part 15 of the FCC Rules. These limits are designed to provide reasonable protection against harmful interference in a residential installation. This device generates, uses, and can radiate radio frequency energy and, if not installed and used in accordance with the instructions, may cause harmful interference to radio communications.
However, there is no guarantee that interference will not occur in a particular installation. If this device does cause harmful interference to radio or television reception, which can be determined by turning the device off and on, the user is encouraged to try to correct the interference by one or more of the following measures:

- Reorient or relocate the receiving antenna.
- Increase the separation between the device and receiver.
- Connect the device into an outlet on a circuit different from that to which the receiver is connected.
- Consult the dealer or an experienced radio/TV technician for help.

NOTE: The manufacturer is not responsible for any radio or TV interference caused by unauthorized modifications to this equipment. Such modifications could void the user's authority to operate the equipment.

The Wi-Fi Module complies with FCC radiation exposure limits set forth for an uncontrolled environment. This device should be installed and operated with a minimum distance of 20 centimeters between the radiator and your body.

This device complies with Industry Canada's licence-exempt RSSs. Operation is subject to the following two conditions:
(1) This device may not cause interference; and
(2) This device must accept any interference, including interference that may cause undesired operation of the device.

Declaration of Conformity

Trade Name: Hisense
Model: 43A6H / 43A65H / 43A68H / 50A6H / 50A65H / 50A68H / 55A6H / 55A65H / 55A68H / 65A6H / 65A65H / 65A68H / 75A6H / 75A65H / 75A68H
Responsible Party: Hisense USA Corporation
Address: 7310 McGinnis Ferry Road, Suwanee, GA 30024
Telephone Number: 678-318-9060
This device complies with Part 15 of the FCC Rules. Operation is subject to the following two conditions: (1) this device may not cause harmful interference, and (2) this device must accept any interference received, including interference that may cause undesired operation.

Dolby, Dolby Vision, Dolby Audio, and the double-D symbol are trademarks of Dolby Laboratories Licensing Corporation. Manufactured under license from Dolby Laboratories. Confidential unpublished works. Copyright © 1992–2021 Dolby Laboratories. All rights reserved.

For DTS patents, see http://patents.dts.com. Manufactured under license from DTS Licensing Limited. DTS, DTS:X, Virtual:X, and the DTS:X logo are registered trademarks or trademarks of DTS, Inc. in the United States and other countries. © 2021 DTS, Inc. ALL RIGHTS RESERVED.

The terms HDMI and HDMI High-Definition Multimedia Interface, and the HDMI Logo are trademarks or registered trademarks of HDMI Licensing Administrator, Inc. in the United States and other countries.

Environmental Protection

This mark indicates that this product should not be disposed together with other domestic garbage, to avoid damage to the environment or human health due to the disposal of uncontrolled waste. Recycle it responsibly for promoting the sustainable reuse of material resources. To return your used device, please use the return systems available in your location or contact the vendor where you purchased your product they could take this product for recycling and protection of the environment.

©2021. All rights reserved. Hisense and the Hisense logo are registered trademarks of Hisense. Other brand and product names are registered trademarks of their respective owners.